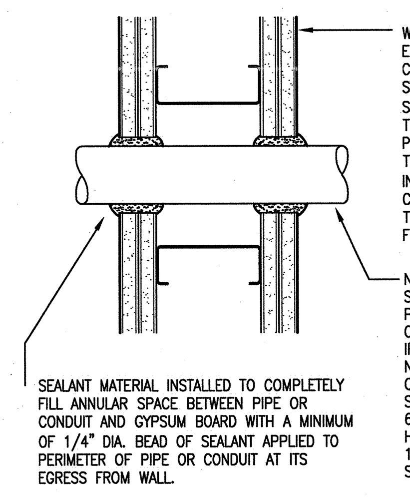

MAX PIPE OR CONDUIT, DIA	ANNULAR SPACE	'F' RATING, HR	'T' RATING, HR
1	0 TO 3/16"	1 OR 2	0, 1 OR 2
1	1/4" TO 1/2"	3 OR 4	3 OR 4
4	0 TO 1-1/2"	1 OR 2	0
6	1/4" TO 1/2"	3 OR 4	0
12	3/16" TO 3/8"	1 OR 2	0

UL SYSTEM NO. W-L-1001

4 (A7.20.40) PIPE @ RATED STUD WALL
SCALE: 3" = 1'- 0" ADT093014-2B

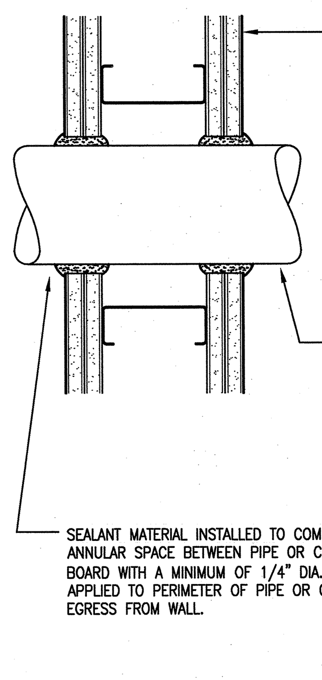

UL SYSTEM NO. W-L-1010

'F' RATING – 2HR
'T' RATING – 0HR

5 (A7.20.40) PIPE @ RATED STUD WALL
SCALE: 3" = 1'- 0" ADT093015-2B

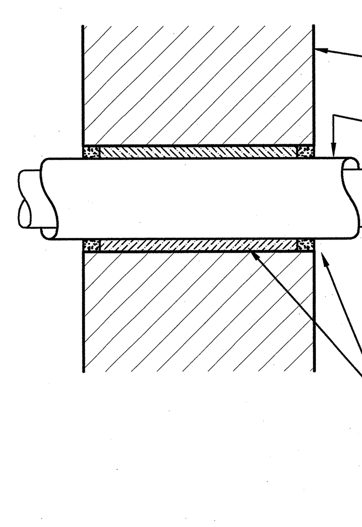

'F' RATING – 4HR
'T' RATING – 2HR

UL SYSTEM NO. W-J-5003

6 (A7.20.40) PIPE @ RATED CONC OR CMU WALL
SCALE: 3" = 1'- 0" ADT093016-2B

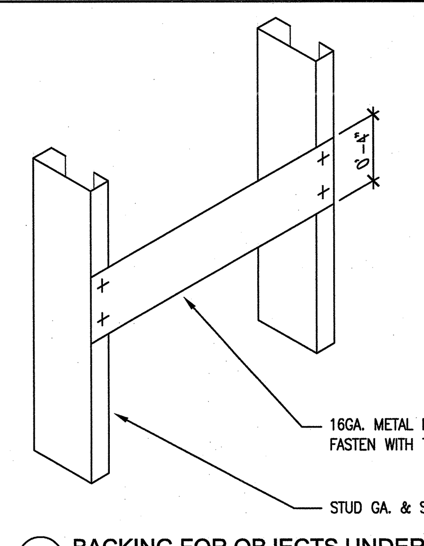

(A) BACKING FOR OBJECTS UNDER 25 LBS/LINEAL FT.

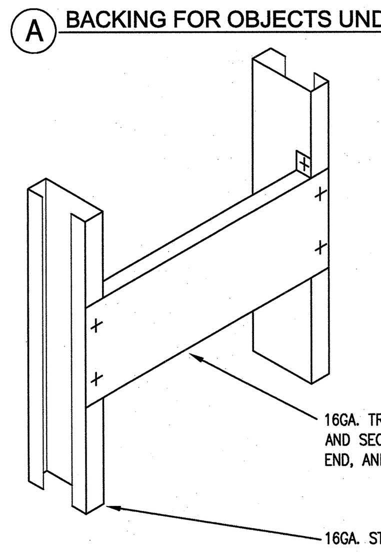

NOTE: ALSO TO BE USED FOR UPPER CABINETS, UON

(B) BACKING FOR OBJECTS MAX. OF 100 LBS/LINEAL FT.

1 (A7.20.40) TYPICAL STUD WALL BACKING
SCALE: 1- 1/2" = 1' – 0" ADT093009-2B

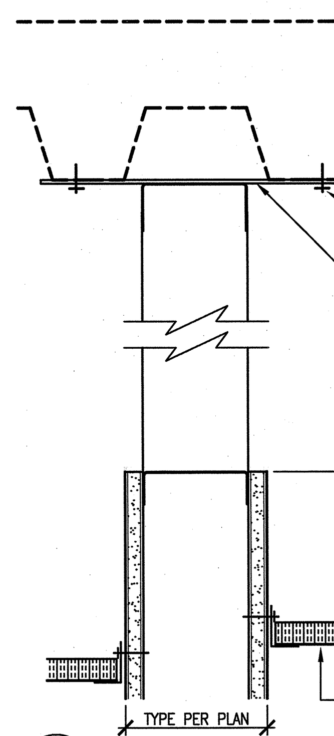

2 (A7.20.40) WALL ABOVE CEILING
SCALE: 3"= 1'-0" ADT093010-2B

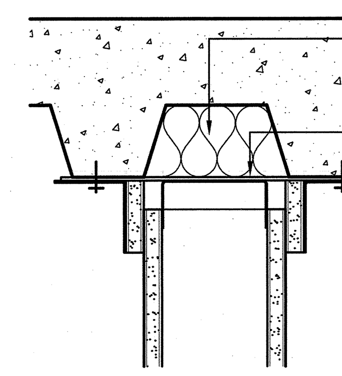

WALL PARALLEL WITH FLUTES

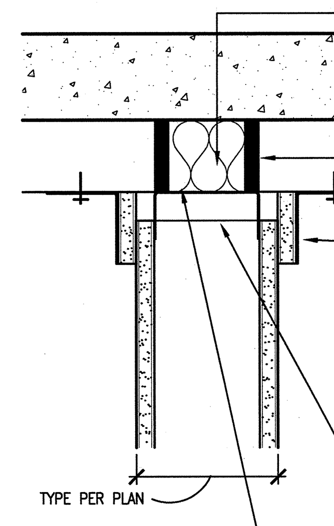

WALL PERPENDICULAR WITH FLUTES

DESIGN REFERENCE:
1-HR WALL: UL SYSTEM HWD0001 (FORMERLY U400T)
2-HR WALL: UL SYSTEM HWD0002 (FORMERLY U400X)

3 (A7.20.40) 1-HR & 2-HR @ WALL HEAD
SCALE: 3"= 1'-0" ADT093011-2B

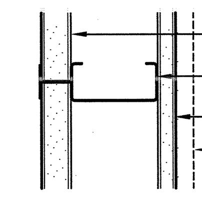

H
H1 1-HR RATED SHAFT WALL – GYP. ASSOCIATION DESIGN WP-7000 UL – U469
H2 2-HR RATED SHAFT WALL – GYP. ASSOCIATION DESIGN WP-7092 UL – U438

H (A7.20.40) WALL TYPE SERIES 'H'
SCALE: 3" = 1' – 0" ADT093007-2B

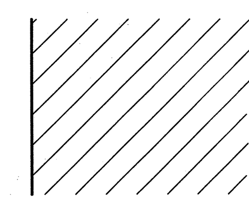

M NON-RATED CMU WALL
M1 1-HR RATED CMU WALL – RATINGS AS INDICATED ON TABLE 709.3.1, SBC
M2 2-HR RATED CMU WALL – RATINGS AS INDICATED ON TABLE 709.3.1, SBC
M4 4-HR RATED CMU WALL – RATINGS AS INDICATED ON TABLE 709.3.1, SBC

M (A7.20.40) WALL TYPE SERIES 'M'
SCALE: 3"=1'-0" ADT093008-2B

SHEET NOTES (ADT09301)

1. WALL TYPE LEGEND AS PER PLANS

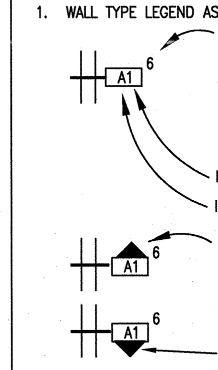

2. AT ALL RATED WALL CONSTRUCTION, ALL LAYERS OF GYPSUM BOARD TO CONTINUE TO UNDERSIDE OF STRUCTURE
3. DEFLECTION LIMITS FOR INTERIOR AND EXTERIOR WALLS AND PARTITION, L/240 PER SBC, TABLE 1610.1

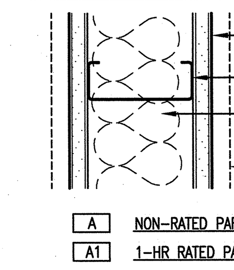

A NON-RATED PARTITION
A1 1-HR RATED PARTITION – GYP. ASSOCIATION DESIGN WP-1070; UL 465
A2 2-HR RATED PARTITION – GYP. ASSOCIATION DESIGN WP-1548; UL 411

A (A7.20.40) WALL TYPE SERIES 'A'
SCALE: 3" = 1'- 0" ADT093002-2B

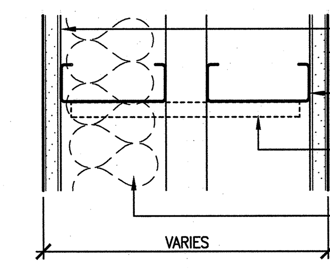

C NON-RATED CHASE WALL
CI 1 HOUR RATED CHASE WALL
CL 2 HOUR RATED CHASE WALL

C (A7.20.40) WALL TYPE SERIES 'C'
SCALE: 3"=1'-0" ADT093003-2B

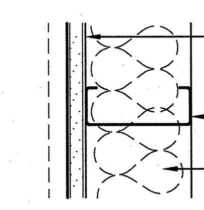

D1 NON-RATED CHASE WALL (1 LAYER GWB)
D2 NON-RATED CHASE WALL (2 LAYER GWB)

D (A7.20.40) WALL TYPE SERIES 'D'
SCALE: 3"=1'-0" ADT093004-2B

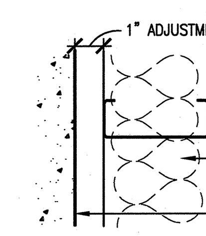

F FURRED WALL

F (A7.20.40) WALL TYPE SERIES 'F'
SCALE: 3" = 1' – 0" ADT093005-2B

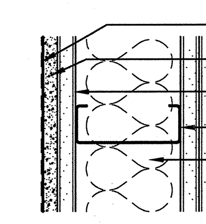

G 2-HR RATED PARTITION; UL U474

G (A7.20.40) WALL TYPE SERIES 'G'
SCALE: 3" = 1'- 0" ADT093006-2B

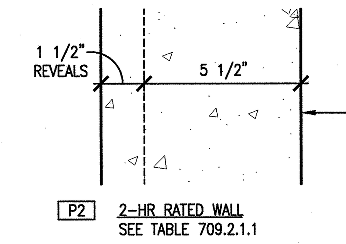

P2 2-HR RATED WALL
SEE TABLE 709.2.1.1

P (A7.20.40) WALL TYPE SERIES 'P'
SCALE: 3" = 1' – 0" ADT093017-2B

SEE H6.10.10 & 11 FOR DETAILS

NO REPRESENTATION OR WARRANTY, EXPRESSED OR IMPLIED, IS MADE AS TO THE ACCURACY, COMPLETENESS OR USEFULNESS OF THE INFORMATION OR STATEMENTS CONTAINED IN THESE DRAWINGS, OR THAT THE USE OR DISCLOSURE OF ANY INFORMATION, APPARATUS, METHOD, OR PROCESS DISCLOSED IN THESE DRAWINGS MAY NOT INFRINGE PRIVATE RIGHTS OF OTHERS. NO LIABILITY IS ASSUMED WITH RESPECT TO THE USE OF, OR FOR DAMAGES RESULTING FROM THE USE OF ANY INFORMATION, APPARATUS, METHOD, OR PROCESS DISCLOSED IN THESE DRAWINGS. DRAWINGS MADE AVAILABLE FOR INFORMATION TO BIDDER ARE NOT TO BE USED FOR OTHER PURPOSES AND ARE TO BE RETURNED UPON REQUEST OF THE FORWARDING CONTRACTOR.

NUMBER OF SECTION OR DETAIL — DRAWING ON WHICH SECTION OR DETAIL IS SHOWN OR TAKEN
SECTION AND DETAIL KEY

THIS DOCUMENT CONTROLLED BY
CHANGE CONTROL SYSTEM 4
ENGINEERING PROCEDURE SNS-ENG-G001

REV	CHANGE TYPE	CHANGE CONTROL SYSTEM	CHANGE REQUEST NUMBER	DESCRIPTION	DSN	CHK	DEPT	DATE	PE	DATE	PJ	DATE	REQ	DATE	UTB	DATE	RPE	RPE NO	DATE
0				CERTIFIED FOR CONSTUCTION – MAY 15, 2001	CF	ED			YJM	9/20/01	JS	8/21/01			JMT	9/25/01	RLB	102104	5/15

REVISION OR ISSUE PURPOSE — REVISION APPROVALS

SC	AW	WRS	RL	WRS	BWJ	--	WRS	--	WAS
ST	CV	EC	EE	EM	IE	M	PD	SE	AR

SQUAD CHECK

RPE — ROBERT L. BARNES REGISTERED ARCHITECT NO. 102104 STATE OF TENNESSEE 5/15/01

DSN	H. BAUMAN	5/15/01
DRW	N. SAMAWI	5/15/01
CHK	E. DENSON	5/15/01
DEPT		
PE	[signature]	9/20/01
PJ	[signature]	8/21/01
REQ		

REV. 0 DATE 5/15/01 UTB [signature] 9/25/01
DRAWING APPROVALS

108031400-A8E-8600-A188

Knight/Jacobs SNS
Knight/Jacobs Joint Venture
701 Scarboro Road, MS 8253
Oak Ridge, TN 37830
865-241-9433
fax 865-241-3400

KNIGHT
Knight Advanced Technology
549 West Randolph Street
Chicago, IL 60661

UT-BATTELLE
Oak Ridge National Laboratory
managed for the DEPARTMENT OF ENERGY under U.S. GOVERNMENT contract DE-AC05-00OR22725
UT-BATTELLE, LLC, • Oak Ridge, Tennessee

PROJECT NAME:
SPALLATION NEUTRON SOURCE

CENTRAL LAB AND OFFICE BUILDING PARTITION SCHEDULE AND DETAILS

1	48	49	50	PLANT	BLDG	FL	SH.	OF	TYPE	CLASS
3	A	X	X	8	8600		1	1	S	U
51		52		53	WBS					REV
NC		NA			1.8.3.14		A7.20.40			0

Date: 04/22/2001 Time: 16:15:57
Username: ESPINOZAF
CHI-F_VOL2:PROJECTS\7000\700_CADD\TASK_28\740_PLOT\A7-20-40.DWG

AutoCAD