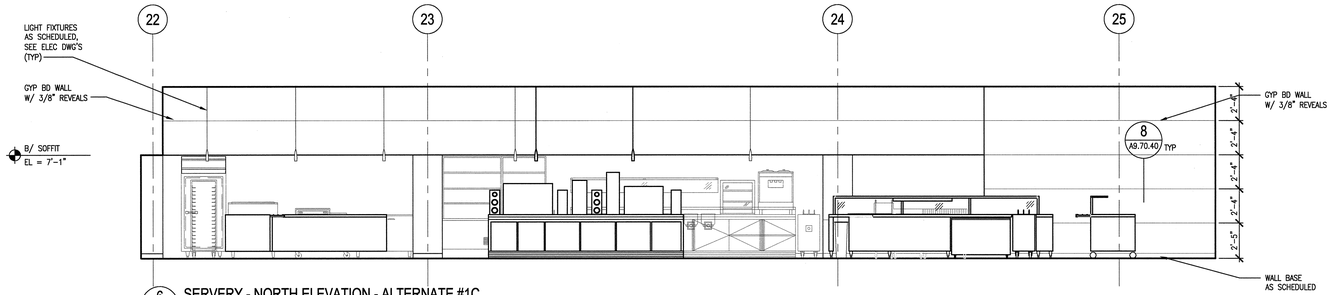


6 A5.50.41 SERVERY - NORTH ELEVATION - ALTERNATE #1C
SCALE 1/4" = 1'-0"
AIE090-2B

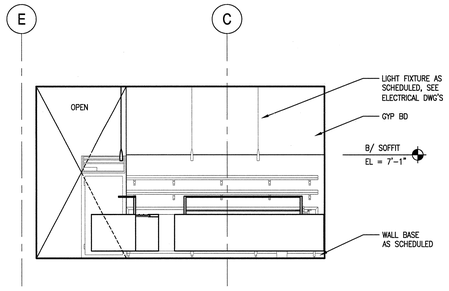


5 A5.50.41 SERVERY - EAST ELEVATION - ALTERNATE #1C
SCALE 1/4" = 1'-0"
AIE090-2B

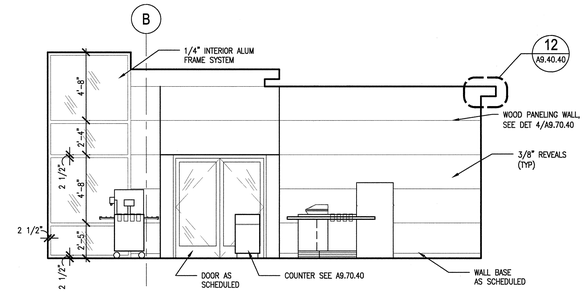


1 A5.50.41 SERVERY - WEST ELEVATION - ALTERNATE #1C
SCALE 1/4" = 1'-0"
AIE090-2B

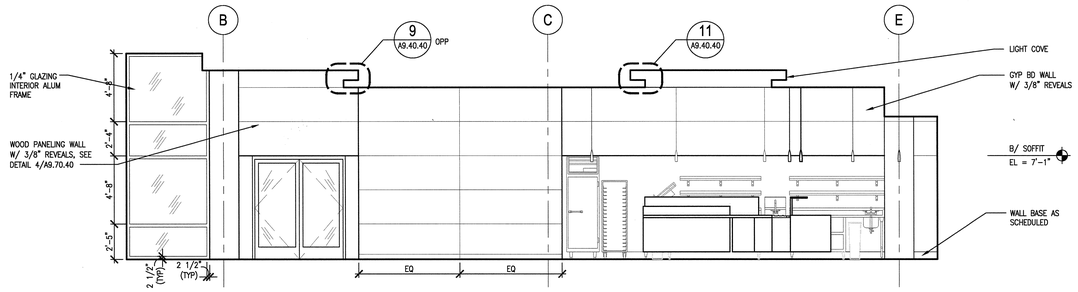


7 A5.50.41 SERVERY - WEST ELEVATION - ALTERNATE #1C
SCALE 1/4" = 1'-0"
AIE090-2B

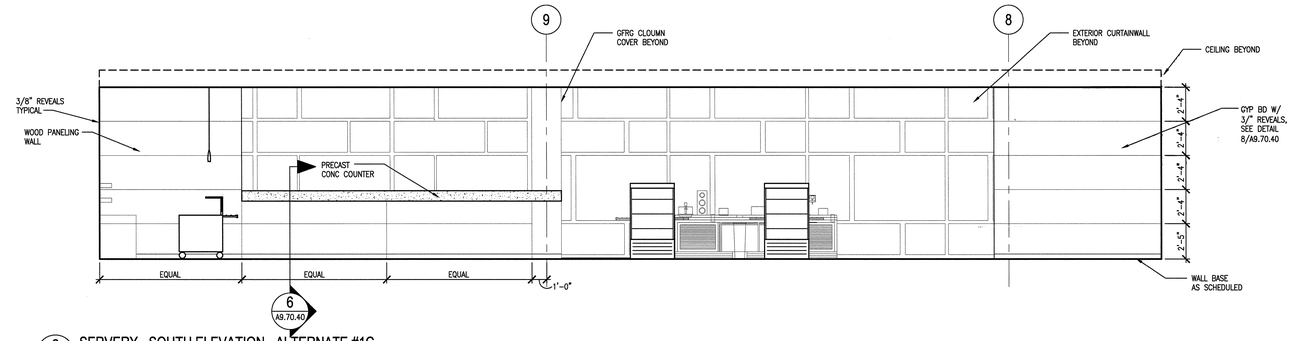


2 A5.50.41 SERVERY - SOUTH ELEVATION - ALTERNATE #1C
SCALE 1/4" = 1'-0"
AIE090-2B

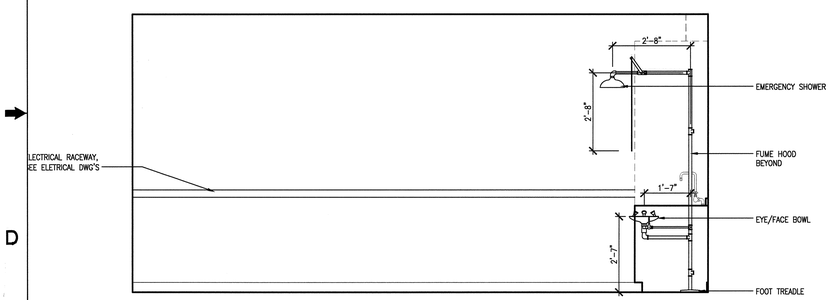


AIE004-2B

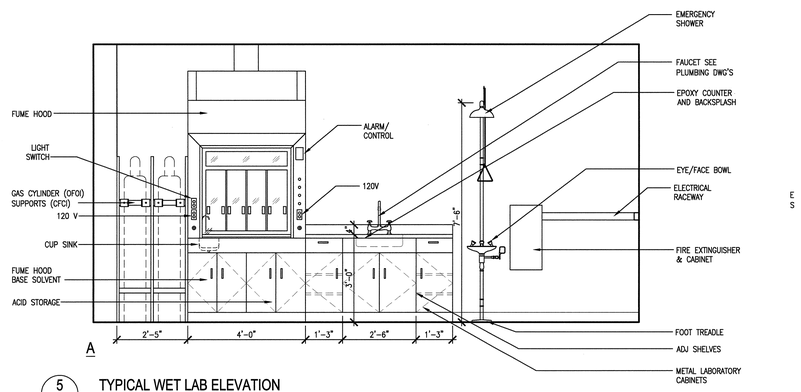


5 A5.50.41 TYPICAL WET LAB ELEVATION
SCALE: 1/2"=1'-0"

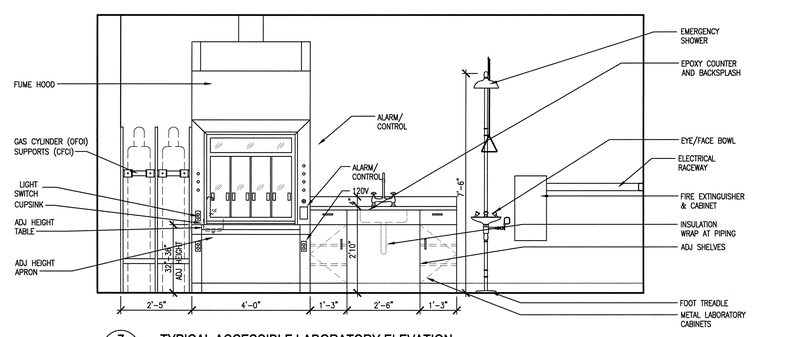


7 A5.50.41 TYPICAL ACCESSIBLE LABORATORY ELEVATION
SCALE: 1/2"=1'-0"
AIE004-2B

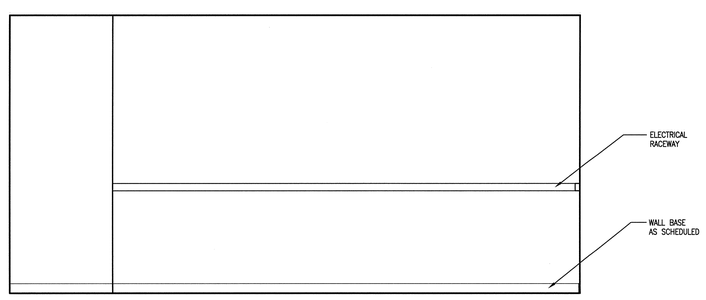


6 A5.50.41 TYPICAL WET LAB ELEVATION
SCALE: 1/2"=1'-0"
AIE004-2B

SHEET NOTES:

1. REFER TO KITCHEN (FOOD SERVICE) EQUIPMENT DRAWINGS FOR REQUIRMENTS AND EQUIPMENT SCHEDULE.
2. WOOD BLOCKING AND METAL PLATE BACKING IS REQUIRED IN STEEL STUD AND GYPSUM WALLS FOR ALL ITEMS THAT ARE ATTACHED TO THE WALL.
3. REFER TO ELECTRICAL AND ELECTRICAL DRAWINGS FOR THERMOSTAT, RECEPTACLE OUTLETS, DATA/PHONE OUTLETS, ETC.

LABORATORY NOTES:

1. ALL PENETRATIONS THROUGH COUNTERTOPS SHALL BE CAULKED WITH ACID-RESISTANT SEALANT.
2. FURNISH AND INSTALL ELECTRICAL CONDUIT TO SURFACE MOUNTED RACEWAY AND SERVICE CARRIERS AS REQUIRED FOR CIRCUITING AND TELEPHONE/DATA SHOWN ON ELECTRICAL DRAWINGS.

FUME HOOD NOTES:

1. ALL FUME HOODS ARE TO BE PROVIDED WITH AIRFOIL.
2. ALL SOLVENT STORAGE CABINETS HAVE HIGH AND LOW LEVEL VENTING. ALL ACID STORAGE HAVE HIGH LEVEL ONLY.

4' 2' 0 4' 8'
SCALE: 1/4" = 1'-0"

2' 1' 0 2' 4'
SCALE: 1/2" = 1'-0"

NO REPRESENTATION OR WARRANTY, EXPRESSED OR IMPLIED, IS MADE AS TO THE ACCURACY, COMPLETENESS OR USEFULNESS OF THE INFORMATION OR STATEMENTS CONTAINED IN THESE DRAWINGS, OR THAT THE USE OR DISCLOSURE OF ANY INFORMATION, APPARATUS, METHOD, OR PROCESS DISCLOSED IN THESE DRAWINGS MAY NOT INFRINGE PRIVATE RIGHTS OF OTHERS. NO LIABILITY IS ASSUMED WITH RESPECT TO THE USE OF, OR FOR DAMAGES RESULTING FROM THE USE OF ANY INFORMATION, APPARATUS, METHOD, OR PROCESS DISCLOSED IN THESE DRAWINGS. DRAWINGS MADE AVAILABLE FOR INFORMATION TO BIDDER ARE NOT TO BE USED FOR OTHER PURPOSES AND ARE TO BE RETURNED UPON REQUEST OF THE FORWARDING CONTRACTOR.

NUMBER OF SECTION OR DETAIL
DRAWING ON WHICH SECTION OR DETAIL IS SHOWN OR TAKEN
SECTION AND DETAIL KEY

THIS DOCUMENT CONTROLLED BY
CHANGE CONTROL SYSTEM 4
ENGINEERING PROCEDURE SNS-ENG-G001

| REV | CHANGE TYPE | CHANGE CONTROL SYSTEM | CHANGE REQUEST NUMBER | DESCRIPTION | DSN | CHK | DEPT | DATE | PE | DATE | PJ | DATE | REQ | DATE | UTB | DATE | RPE | RPE NO | DATE | ST | CV | EC | EE | EM | IE | M | PD | SE | AR |
|---|---|---|---|---|---|---|---|---|---|---|---|---|---|---|---|---|---|---|---|---|---|---|---|---|---|---|---|---|---|
| 1 | | | | CERTIFIED FOR CONSTRUCTION - 12/20/01 | CF | ED | | | | | | | | | | | RLB | 102104 | 12/20/01 | RW | AW | BWJ | PD | BWJ | BWJ | -- | BWJ | -- | ED |
| 0 | -- | -- | -- | CERTIFIED FOR CONSTRUCTION - MAY 15, 2001 | CF | ED | | | CLG | 9/6/01 | US | 8/21/01 | | | JRL | 9/25/01 | RLB | 102104 | 5/15/01 | SC | AW | WRS | RL | WRS | BWJ | -- | WRS | -- | WAS |
| | | | | REVISION OR ISSUE PURPOSE | | | | | REVISION APPROVALS | | | | | | | | | | | SQUAD CHECK | | | | | | | | |

RPE
ROBERT L. BARNES REGISTERED ARCHITECT NO. 102104 STATE OF TENNESSEE
12/12/01
REV. DATE

| | | |
|---|---|---|
| DSN | H. BAUMAN | 5/15/01 |
| DRW | A. OWENS | 5/15/01 |
| CHK | E. DENSON | 5/15/01 |
| DEPT | | |
| PE | C.L. GARREN | 9/6/01 |
| PJ | J. STELLERN | 8/21/01 |
| REQ | | |
| UTB | J.R. LAWSON | 9/25/01 |

DRAWING APPROVALS

108031400-A8E-8600-A095

Knight Jacobs
Knight/Jacobs Joint Venture
701 Scarboro Road, MS 8253
Oak Ridge, TN 37830
865-241-9433
fax 865-241-3400

KNIGHT
Knight Advanced Technology
549 West Randolph Street
Chicago, IL 60661

UT-BATTELLE
Oak Ridge National Laboratory
managed for the DEPARTMENT OF ENERGY under U.S. GOVERNMENT contract DE-AC05-00OR22725
UT-BATTELLE, LLC. • Oak Ridge, Tennessee

PROJECT NAME:
SPALLATION NEUTRON SOURCE
CENTRAL LAB AND OFFICE BUILDING
SERVERY & LABORATORIES
ELEVATIONS

| 1 | 48 | 49 | 50 | PLANT | BLDG | FL | SH. | OF | TYPE | CLASS |
|---|---|---|---|---|---|---|---|---|---|---|
| 3 | A | X | X | 8 | 8600 | | 1 | 1 | S | U |
| 51 | | 52 | | 53 | WBS | | A5.50.41 | | | REV |
| NC | | NA | | | 1.8.3.14 | | | | | 1 |

Date: 12/19/2001 Time: 12:09:48
Operator: BAMOW
CH:-F_SQ_SPRGAUTO_TOWER_FOR_CHECK_SER_140_PLOT.dc-50-41.DWG

AutoCAD