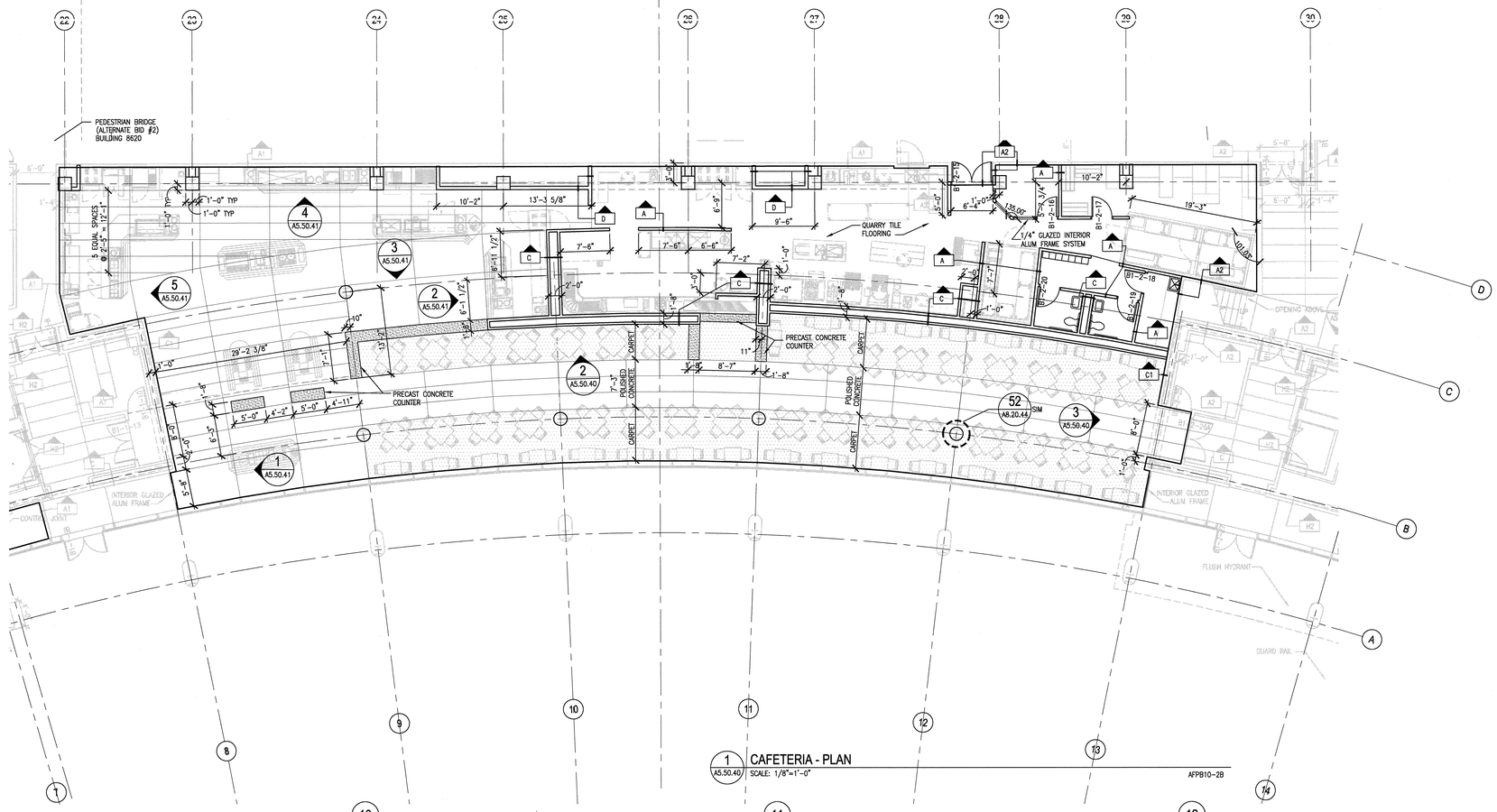

1 A5.50.40 CAFETERIA - PLAN
SCALE: 1/8"=1'-0"
AFPB10-2B

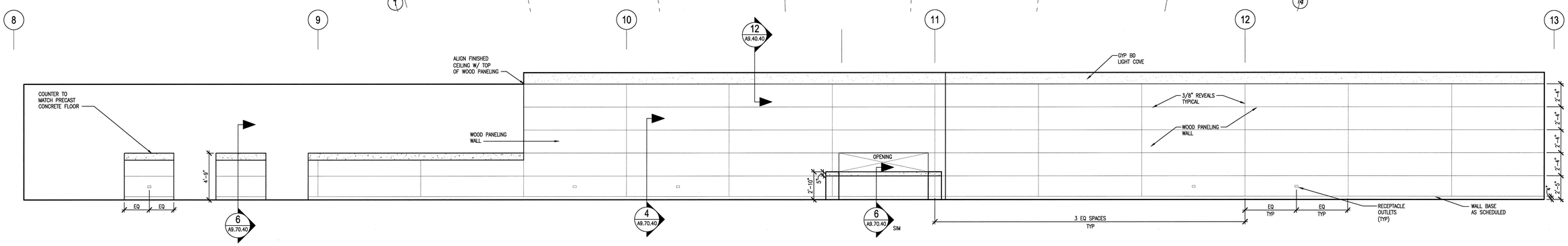

3 A5.50.41 DINING ROOM - NORTH ELEVATION
SCALE 1/4" = 1'-0"
AIE090-2B

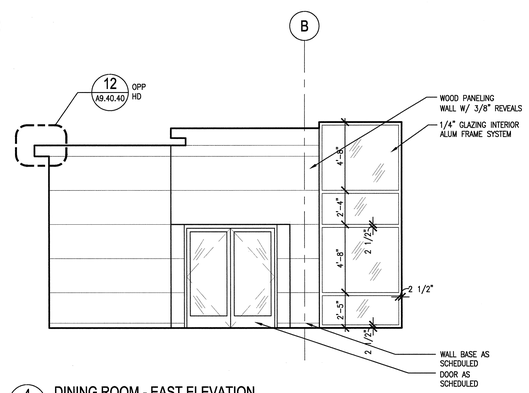

4 A5.50.41 DINING ROOM - EAST ELEVATION
SCALE 1/4" = 1'-0"
AIE090-2B

SCALE: 1/4" = 1'-0"

SCALE: 1/8" = 1'-0"

SHEET NOTES:

1. SEE SHEET A5.20.45 FOR TYPICAL ELECTRICAL, COMMUNICATIONS AND DEVICES MOUNTING HEIGHTS.
2. WOOD BLOCKING AND METAL PLATE BACKING IS REQUIRED IN STEEL STUD AND GYPSUM WALLS FOR ALL ITEMS THAT ARE ATTACHED TO THE WALL.
3. ALL DOORS AND ADJACENT SIDE LITES WHOSE NEAREST VERTICAL EDGE IS WITHIN 4'-0" FROM A DOOR IN A CLOSED POSITION, SHALL BE GLAZED WITH TEMPERED GLASS TO THE FULL HEIGHT OF THE DOOR.
4. ▥ DENOTES 1/4" CLEAR, FULLY TEMPERED SAFETY GLASS.
5. REFER TO KITCHEN (FOOD SERVICE) EQUIPMENT DRAWINGS FOR REQUIRMENTS AND EQUIPMENT SCHEDULE.
6. REFER TO ELECTRICAL AND ELECTRICAL DRAWINGS FOR THERMOSTAT, RECEPTACLE OUTLETS, DATA/PHONE OUTLETS, ETC.

108031400-A8E-8600-A094

Knight Jacobs
Knight/Jacobs Joint Venture
701 Scarboro Road, MS 8253
Oak Ridge, TN 37830
865-241-9433
fax 865-241-3400

KNIGHT
Knight Advanced Technology
549 West Randolph Street
Chicago, IL 60661

NO REPRESENTATION OR WARRANTY, EXPRESSED OR IMPLIED, IS MADE AS TO THE ACCURACY, COMPLETENESS OR USEFULNESS OF THE INFORMATION OR STATEMENTS CONTAINED IN THESE DRAWINGS, OR THAT THE USE OR DISCLOSURE OF ANY INFORMATION, APPARATUS, METHOD, OR PROCESS DISCLOSED IN THESE DRAWINGS MAY NOT INFRINGE PRIVATE RIGHTS OF OTHERS. NO LIABILITY IS ASSUMED WITH RESPECT TO THE USE OF, OR FOR DAMAGES RESULTING FROM THE USE OF ANY INFORMATION, APPARATUS, METHOD, OR PROCESS DISCLOSED IN THESE DRAWINGS. DRAWINGS MADE AVAILABLE FOR INFORMATION TO BIDDER ARE NOT TO BE USED FOR OTHER PURPOSES AND ARE TO BE RETURNED UPON REQUEST OF THE FORWARDING CONTRACTOR.

NUMBER OF SECTION OR DETAIL
DRAWING ON WHICH SECTION OR DETAIL IS SHOWN OR TAKEN
SECTION AND DETAIL KEY

THIS DOCUMENT CONTROLLED BY
CHANGE CONTROL SYSTEM 4
ENGINEERING PROCEDURE SNS-ENG-G001

REV	CHANGE TYPE	CHANGE CONTROL SYSTEM	CHANGE CONTROL NUMBER	DESCRIPTION	DSN	CHK	DEPT
1				CERTIFIED FOR CONSTRUCTION – 12/20/01	CF	ED	
0	–	–	–	CERTIFIED FOR CONSTRUCTION – MAY 15, 2001	CF	ED	

REVISION OR ISSUE PURPOSE

DATE	PE	DATE	PJ	DATE	REQ	DATE	UTB	DATE	RPE	RPE NO	DATE
				12/20/01				12/20/01	RLB	102104	12/20/01
	CLG	9/6/01	US	8/21/01			JRL	9/25/01	RLB	102104	5/15/01

REVISION APPROVALS

ST	CV	EC	EE	EM	IE	M	PD	SE	AR
RW	AW	BWJ	PD	BWJ	BWJ	--	BWJ	--	ED
SC	AW	WRS	RL	WRS	BWJ	--	WRS	--	WAS

SQUAD CHECK

RPE
ROBERT L. BARNES REGISTERED ARCHITECT NO. 102104 STATE OF TENNESSEE
12/20/01

REV.	DATE			
DSN	H. BAUMAN	5/15/01		
DRW	A. OWENS	5/15/01		
CHK	E. DENSON	5/15/01		
DEPT				
PE	C.L. GARREN	9/6/01		
PJ	J. STELLERN	8/21/01		
REQ				
UTB	J.R. LAWSON	9/25/01		

DRAWING APPROVALS

UT-BATTELLE
Oak Ridge National Laboratory
managed for the DEPARTMENT OF ENERGY under U.S. GOVERNMENT contract DE-AC05-00OR22725
UT-BATTELLE, LLC. + Oak Ridge, Tennessee

PROJECT NAME:
SPALLATION NEUTRON SOURCE
CENTRAL LAB AND OFFICE BUILDING
CAFETERIA PLAN &
DINING ROOM ELEVATIONS - ALTERNATE #1C

1	48	49	50	PLANT	BLDG	FL	SH.	OF	TYPE	CLASS
3	A	X	X	8	8600		1	1	S	U

51	52	53	WBS		REV
NC	NA		1.8.3.14	A5.50.40	1

Date: 12/18/2001 Time: 13:00:20
Username: BWJ8
DW=T:\PROJPROJECTS\N8\TOL\DGN\N8K_SB*AS_PLT\P-00-40.DWG