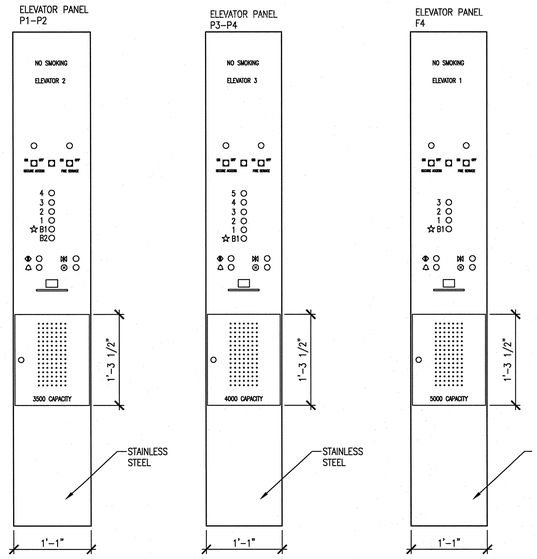

12 A5.30.49 ELEVATOR PANELS
SCALE: 1" = 1'- 0" ADT142007-2B

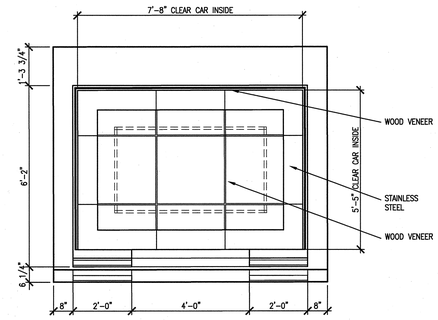

8 A5.30.49 ELEVATOR CAB P3-P4 REFLECTED CEILING
SCALE: 1/2"=1'-0" AIE031-2B

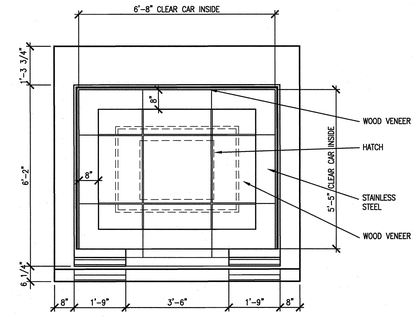

4 A5.30.49 ELEVATOR CAB P1-P2 REFLECTED CEILING
SCALE: 1/2"=1'-0" AIE031-2B

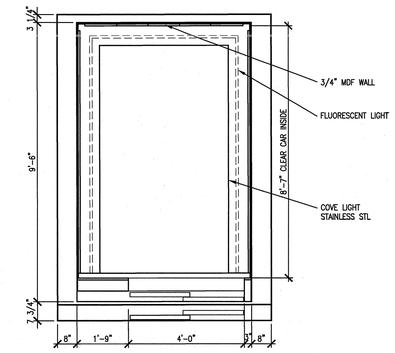

1 A5.30.49 ELEVATOR CAB F4- REFLECTED CEILING
SCALE: 1/2"=1'-0" AIE031-2B

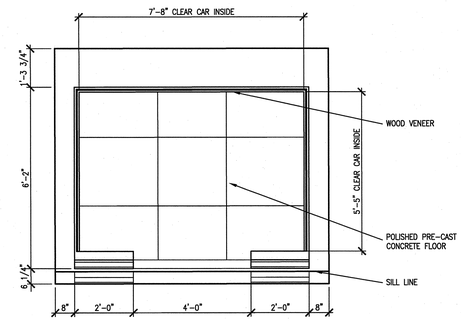

9 A5.30.49 ELEVATOR CAB P3-P4 PLAN
SCALE: 1/2"=1'-0" AIE031-2B

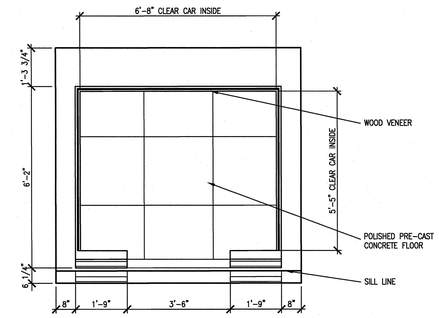

5 A5.30.49 ELEVATOR CAB P1-P2 PLAN
SCALE: 1/2"=1'-0" AIE031-2B

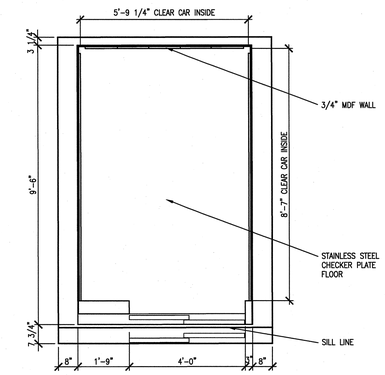

2 A5.30.49 ELEVATOR CAB F4-PLAN
SCALE: 1/2"=1'-0" AIE031-2B

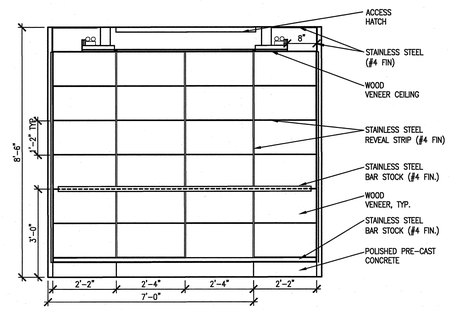

10 A5.30.49 ELEVATOR CAB P3-P4 ELEVATION
SCALE: 1/2"=1'-0" AIE031-2B

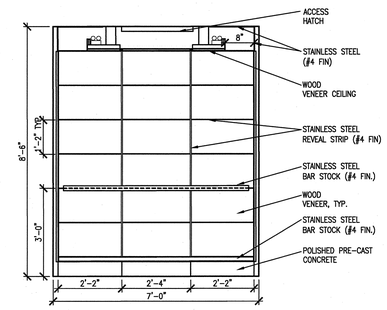

6 A5.30.49 ELEVATOR CAB P1-P2 ELEVATION
SCALE: 1/2"=1'-0" AIE031-2B

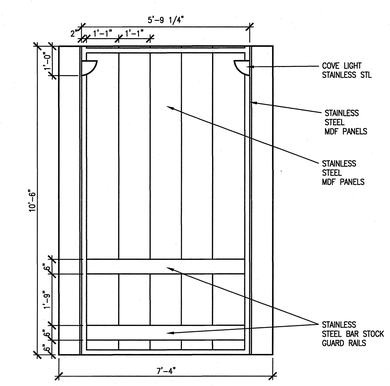

3 A5.30.49 ELEVATOR CAB F4-ELEVATION
SCALE: 1/2"=1'-0" AIE031-2B

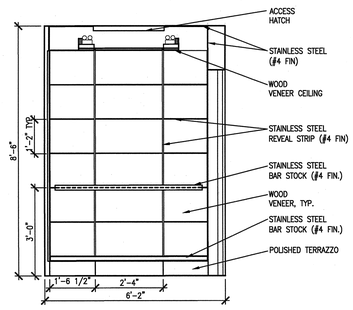

11 A5.30.49 ELEVATOR CAB P1-P4 ELEVATION
SCALE: 1/2"=1'-0" AIE031-2B

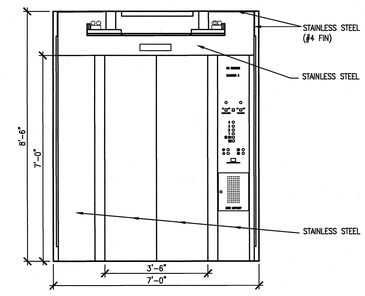

7 A5.30.49 ELEVATOR CAB P1-P2 ELEVATION (P3 & P4 SIMILAR)
SCALE: 1/2"=1'-0" AIE031-2B

NO REPRESENTATION OR WARRANTY, EXPRESSED OR IMPLIED, IS MADE AS TO THE ACCURACY, COMPLETENESS OR USEFULNESS OF THE INFORMATION OR STATEMENTS CONTAINED IN THESE DRAWINGS, OR THAT THE USE OR DISCLOSURE OF ANY INFORMATION, APPARATUS, METHOD, OR PROCESS DISCLOSED IN THESE DRAWINGS MAY NOT INFRINGE PRIVATE RIGHTS OF OTHERS. NO LIABILITY IS ASSUMED WITH RESPECT TO THE USE OF, OR FOR DAMAGES RESULTING FROM THE USE OF ANY INFORMATION, APPARATUS, METHOD, OR PROCESS DISCLOSED IN THESE DRAWINGS. DRAWINGS MADE AVAILABLE FOR INFORMATION TO BIDDER ARE, NOT TO BE USED FOR OTHER PURPOSES AND ARE TO BE RETURNED UPON REQUEST OF THE FORWARDING CONTRACTOR.

NUMBER OF SECTION OR DETAIL
DRAWING ON WHICH SECTION OR DETAIL IS SHOWN OR TAKEN
SECTION AND DETAIL KEY

THIS DOCUMENT CONTROLLED BY
CHANGE CONTROL SYSTEM 4
ENGINEERING PROCEDURE SNS-ENG-G001

REV	CHANGE TYPE	CHANGE CONTROL SYSTEM	CHANGE REQUEST NUMBER	DESCRIPTION	DSN	CHK	DEPT	DATE	PE	DATE	PJ	DATE	REQ	DATE	UTB	DATE	RPE	RPE NO	DATE	SC	AW	WRS	RL	WRS	BWJ	--	WRS	--	WAS
0				CERTIFIED FOR CONSTUCTION – MAY 15, 2001	CF	ED											RLB	102104	5/15/01										
																				ST	CV	EC	EE	EM	IE	M	PD	SE	AR

REVISION OR ISSUE PURPOSE — REVISION APPROVALS — SQUAD CHECK

RPE: ROBERT L. BARNES, REGISTERED ARCHITECT, No. 10214, STATE OF TENNESSEE — 5/15/01
REV. 0 DATE 5/15/01

DSN	H. BAUMAN	5/15/01
DRW	J. O'BRIEN	5/15/01
CHK	E. DENSON	5/15/01
DEPT		
PE		5/15/01
PJ		5/15/01
REQ		
UTB		5/15/01

DRAWING APPROVALS

108031400-A8E-8600-A093

Knight/Jacobs Joint Venture
701 Scarboro Road, MS 8253
Oak Ridge, TN 37830
865-241-9433
for 865-241-3400

KNIGHT
Knight Advanced Technology
500 West Randolph Street
Chicago, IL 60661

UT-BATTELLE
Oak Ridge National Laboratory
managed for the DEPARTMENT OF ENERGY under
U.S. GOVERNMENT contract DE-AC05-000R22725
UT-BATTELLE, LLC. ● Oak Ridge, Tennessee

PROJECT NAME:
SPALLATION NEUTRON SOURCE
CENTRAL LAB AND OFFICE BUILDING
ELEVATOR CABS
ELEVATIONS & DETAILS

1	48	49	50	PLANT	BLDG	FL	SH.	OF	TYPE	CLASS
3	A	X	X	8	8600		1	1	S	U
51		52		53	WBS					REV
NC		NA			1.8.3.14		A5.30.49			0

Date: 05/15/2001 Time: 22:21:42
Username: WBW0W
DN=C,RS=ENGSYS,OU=SYS,OU=SS_CADD,OU=SAA_SP,O=KJ1,O=UT,V3=-35-45.3W5