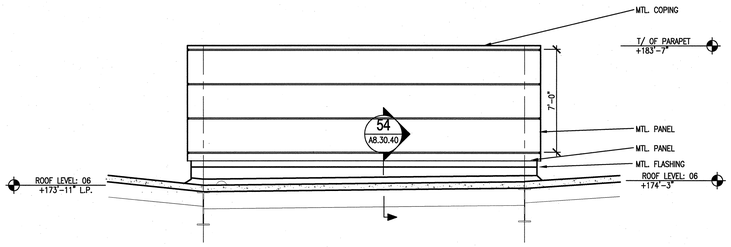

7 A5.30.48 ELEVATOR PENTHOUSE ELEVATION
SCALE: 1/4"=1'-0" AWS030-2B

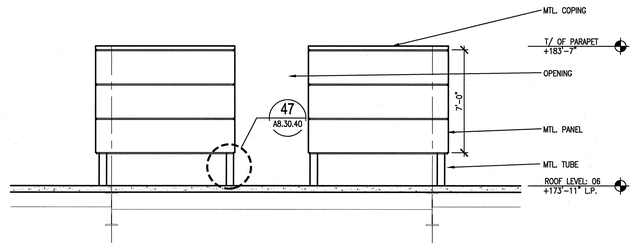

6 A5.30.48 ROOF SCREEN ELEVATION
SCALE: 1/4"=1'-0" AWS030-2B

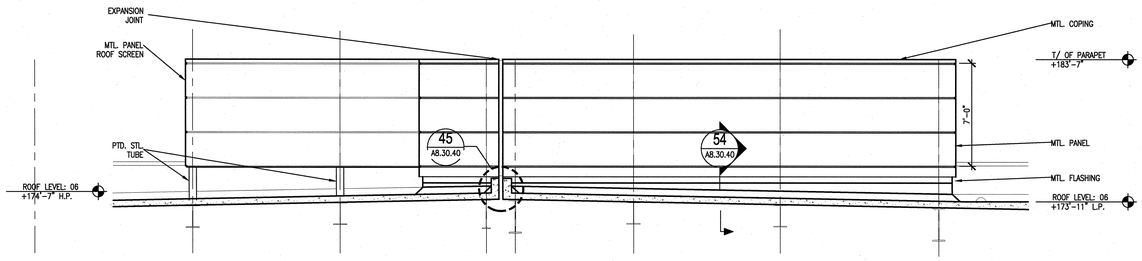

8 A5.30.48 ELEVATOR PENTHOUSE & ROOF SCREEN ELEVATION
SCALE: 1/4"=1'-0" AWS030-2B

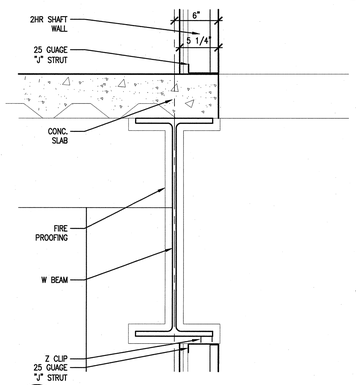

15 A5.30.48 DETAIL- ELEVATOR SHAFT WALL SECTION
SCALE: 1-1/2"=1'-0" ADT142006-2B

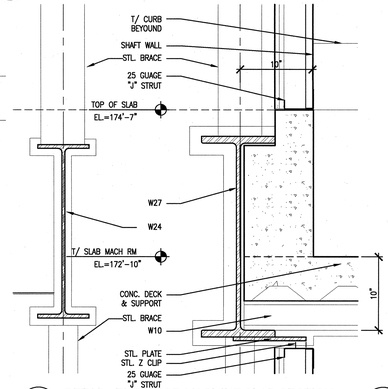

13 A5.30.48 DETAIL- ELEVATOR MACHINE SLAB SECTION
SCALE: 1-1/2"=1'-0" ADT142004-2B

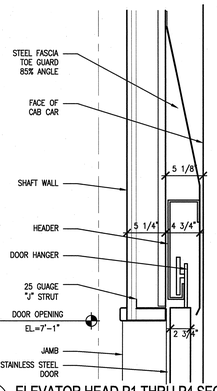

11 A5.30.48 ELEVATOR HEAD P1 THRU P4 SECTION
SCALE: 1-1/2"=1'-0" ADT142001-2B

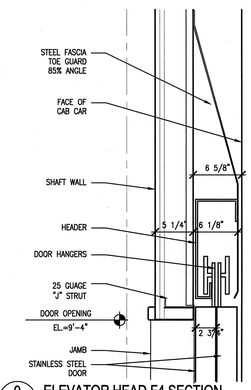

9 A5.30.48 ELEVATOR HEAD F4 SECTION
SCALE: 1-1/2"=1'-0" ADT142002-2B

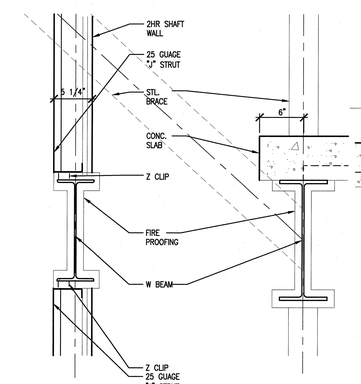

16 A5.30.48 DETAIL- ELEVATOR SHAFT WALL SECTION
SCALE: 1-1/2"=1'-0" ADT142005-2B

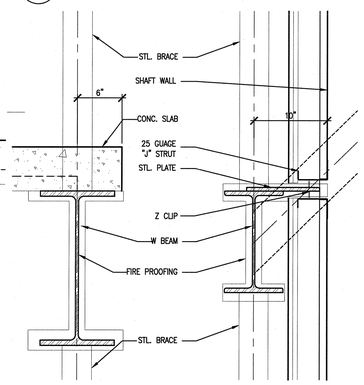

14 A5.30.48 DETAIL- ELEVATOR SHAFT WALL SECTION
SCALE: 1-1/2"=1'-0" ADT142003-2B

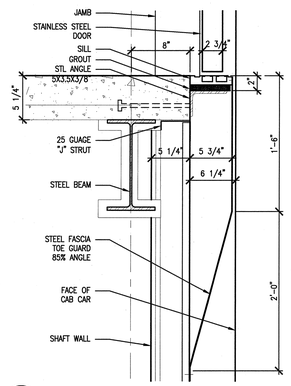

12 A5.30.48 ELEVATOR P1 THRU P4 SILL SECTION
SCALE: 1-1/2"=1'-0" ADT142001-2B

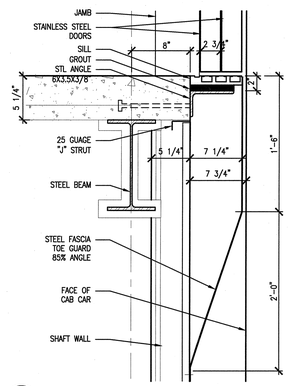

10 A5.30.48 ELEVATOR F4 SILL SECTION
SCALE: 1-1/2"=1'-0" ADT142002-2B

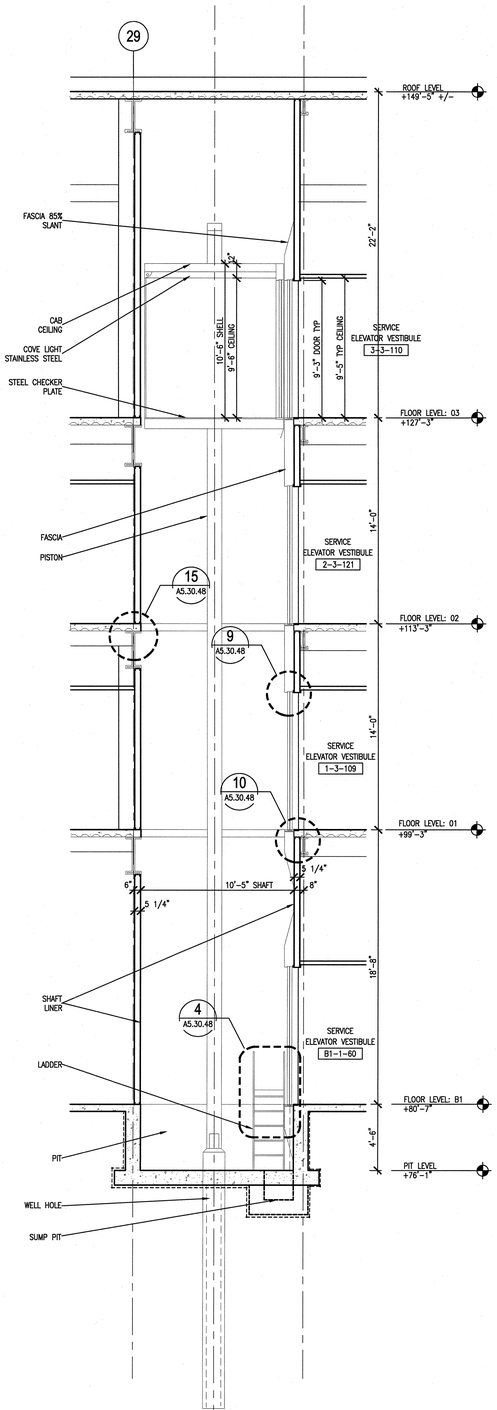

5 A5.30.48 ELEVATOR F-4 SECTION
SCALE: 1/4"=1'-0" AWS030-2B

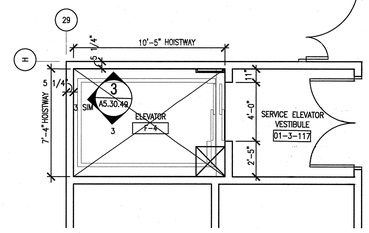

1 A2.01.63 ELEVATOR F-4 01-03 LEVEL PLAN
SCALE: 1/4"=1'-0" AFP010-2B

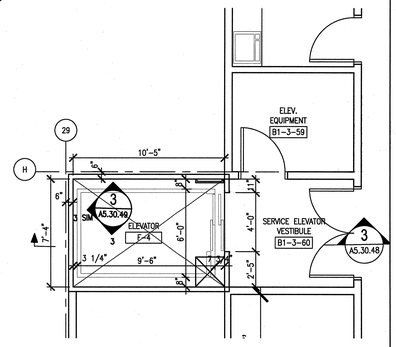

2 A2.B1.63 ELEVATOR F-4 B1-LEVEL PLAN
SCALE: 1/4"=1'-0" AFPB10-2B

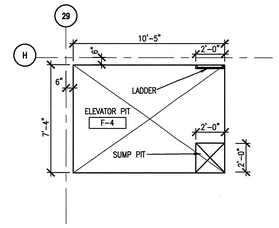

3 A2.B1.63 ELEVATOR PIT F-4 B1 LEVEL PLAN
SCALE: 1/4"=1'-0" AEPB20-2B

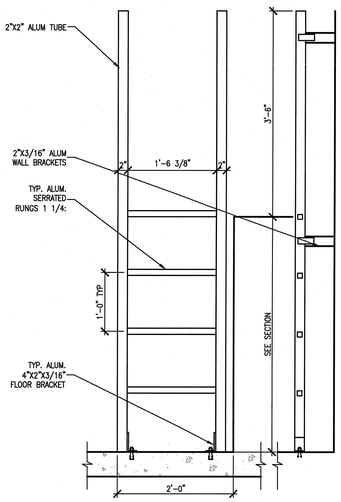

4 A5.30.48 DETAIL- LADDER
SCALE 1" = 1'- 0" ADT055030-2B

108031400-A8E-8600-A092

Knight Jacobs
Knight/Jacobs Joint Venture
701 Scarboro Road, MS 8253
Oak Ridge, TN 37830
865-241-9433
fax 865-241-3400

KNIGHT
Knight Advanced Technology
540 West Madison Street
Chicago, IL 60661

UT-BATTELLE
Oak Ridge National Laboratory
managed for the DEPARTMENT OF ENERGY under
U.S. GOVERNMENT contract DE-AC05-000R22725
UT-BATTELLE, LLC. in Oak Ridge, Tennessee

DSN	H. BAUMAN	5/15/01
DRW	J. O'BRIEN	5/15/01
CHK	E. DENSON	5/15/01
DEPT		
PE		5/15/01
PJ		5/15/01
REQ		
UTB		5/15/01

RPE: ROBERT L. BARNES, REGISTERED ARCHITECT, 102104, STATE OF TENNESSEE, 5/15/01
REV. 0 DATE 5/15/01

PROJECT NAME:
SPALLATION NEUTRON SOURCE
CENTRAL LAB AND OFFICE BUILDING
ELEVATOR & PENTHOUSE PLANS, SECTIONS & DETAILS ELEVATORS F4, P3 & P4

1	48	49	50	PLANT	BLDG	FL	SH.	OF	TYPE	CLASS
3	A	X	X	8	8600		1	1	S	U
51		52		53	WBS					REV
NC		NA			1.8.3.14		A5.30.48			0

REV	CHANGE TYPE	CHANGE CONTROL SYSTEM	CHANGE REQUEST NUMBER	DESCRIPTION	DSN	CHK	DEPT	DATE	PE	DATE	PJ	DATE	REQ	DATE	UTB	DATE	RPE	RPE NO	DATE
0				CERTIFIED FOR CONSTUCTION – MAY 15, 2001	CF	ED				5/15/01		5/15/01				5/15/01	RLB	102104	5/15/01

REVISION OR ISSUE PURPOSE — REVISION APPROVALS

SC	AW	WRS	RL	WRS	BWJ	--	WRS	--	WAS
ST	CV	EC	EE	EM	IE	M	PD	SE	AR

SQUAD CHECK — DRAWING APPROVALS

NO REPRESENTATION OR WARRANTY, EXPRESSED OR IMPLIED, IS MADE AS TO THE ACCURACY, COMPLETENESS OR USEFULNESS OF THE INFORMATION OR STATEMENTS CONTAINED IN THESE DRAWINGS, OR THAT THE USE OR DISCLOSURE OF ANY INFORMATION, APPARATUS, METHOD, OR PROCESS DISCLOSED IN THESE DRAWINGS MAY NOT INFRINGE PRIVATE RIGHTS OF OTHERS. NO LIABILITY IS ASSUMED WITH RESPECT TO THE USE OF, OR FOR DAMAGES RESULTING FROM THE USE OF ANY INFORMATION, APPARATUS, METHOD, OR PROCESS DISCLOSED IN THESE DRAWINGS. DRAWINGS MADE AVAILABLE FOR INFORMATION TO BIDDER ARE NOT TO BE USED FOR OTHER PURPOSES AND ARE TO BE RETURNED UPON REQUEST OF THE FORWARDING CONTRACTOR.

NUMBER OF SECTION OR DETAIL — DRAWING ON WHICH SECTION OR DETAIL IS SHOWN OR TAKEN
SECTION AND DETAIL KEY

THIS DOCUMENT CONTROLLED BY
CHANGE CONTROL SYSTEM 4
ENGINEERING PROCEDURE SNS-ENG-G001

Date: 05/15/2001 Time: 22:05:13
Drawing: A5.30.48
SH-C:\SS.DYNSUITE\TEMP\TEMP_DWGR\DWG_DEP\NG_PLT\DT\UT-30-46.DWG

AutoCAD