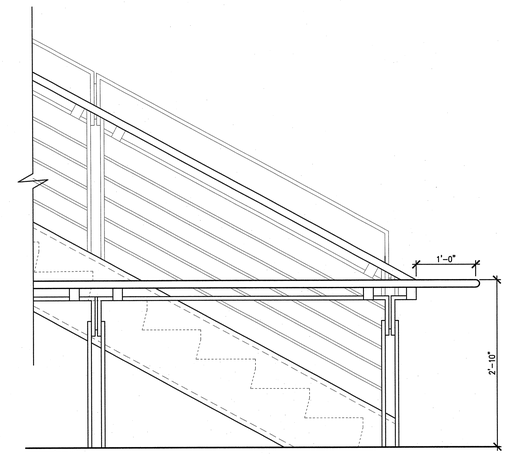

17 A5.30.44 STAIR GUARD RAIL DETAIL
SCALE: 1" = 1'- 0" ADT033019-2B

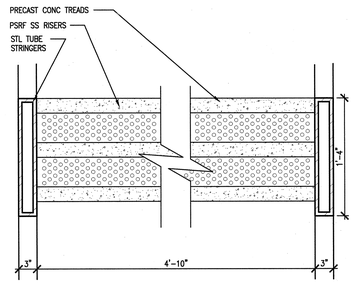

15 A5.30.44 DETAIL-STAIR PERFORATED RISER
SCALE: 1 1/2"=1'-0" ADT033022-2B

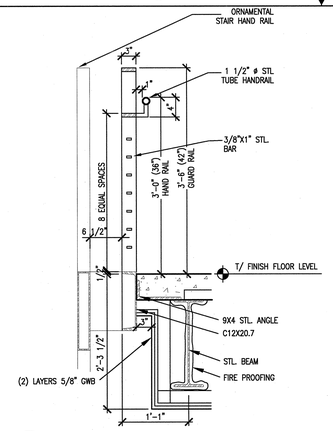

8 A5.30.44 STAIR GUARD RAIL DETAIL
SCALE: 1" = 1'- 0" ADT33019

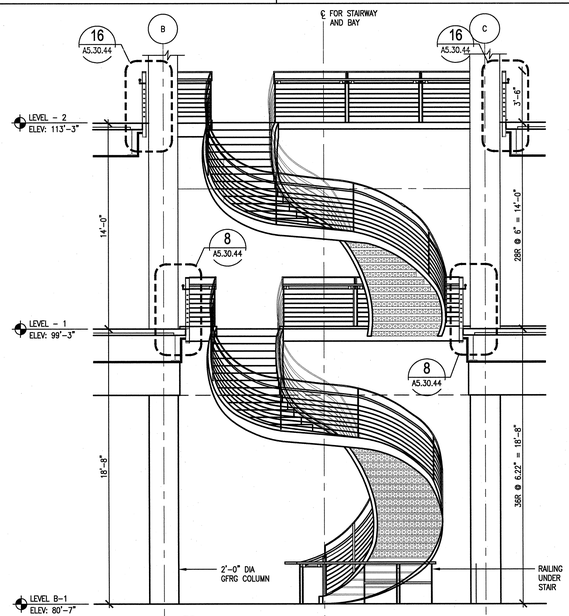

4 A5.30.44 ELEVATION OF ORNAMENTAL STAIR # 6
SCALE: 1/4"=1'-0" ADT033180-2B

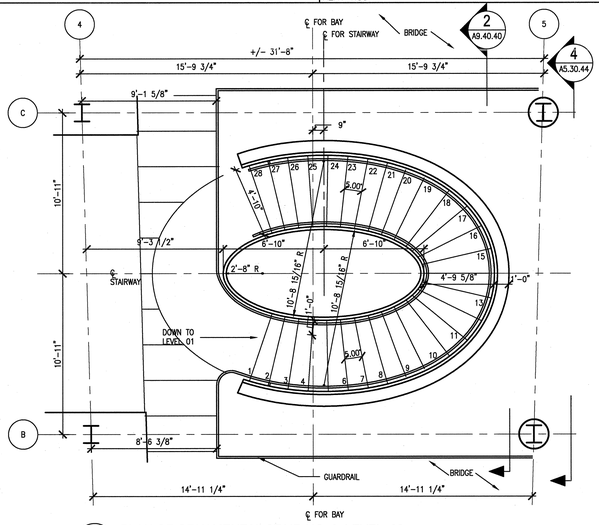

1 A5.30.44 PLAN OF ORNAMENTAL STAIR NO. 6: LEVEL -02
SCALE: 1/4"=1'-0" ADT033018-2B

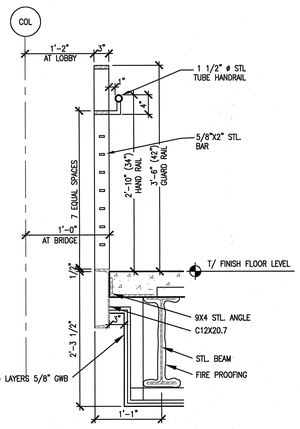

16 A5.30.44 GUARD RAIL DETAIL
SCALE: 1" = 1'- 0" ADT33021

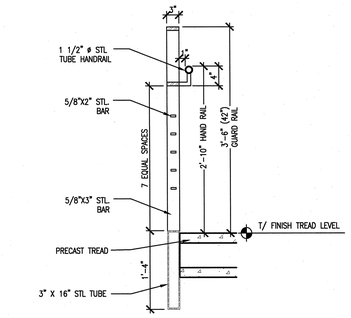

A xxxxxxx STAIR HAND RAIL DETAIL
SCALE: 1" = 1'- 0" ADT033019-2B

9 A5.30.44 DETAIL-STAIR PERFORATED RISER
SCALE: 1 1/2"=1'-0" ADT033023-2B

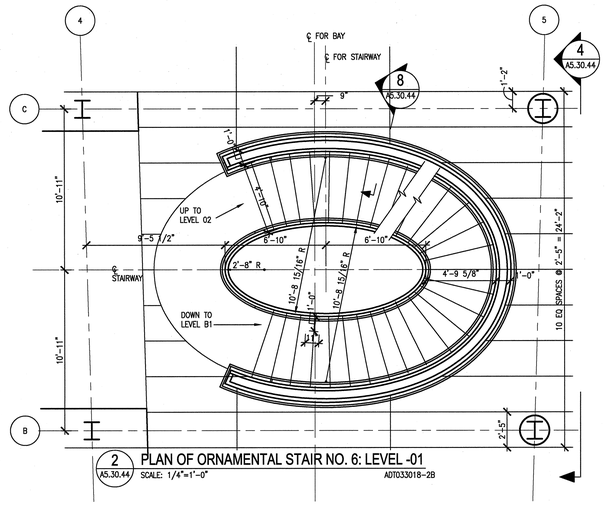

2 A5.30.44 PLAN OF ORNAMENTAL STAIR NO. 6: LEVEL -01
SCALE: 1/4"=1'-0" ADT033018-2B

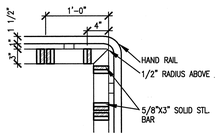

14 A5.30.44 GUARD RAIL PLAN DETAIL
SCALE: 1" = 1'- 0" ADT33021

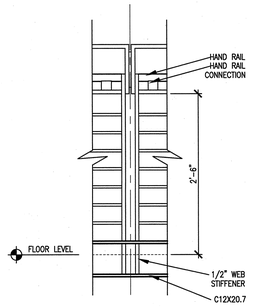

11 A5.30.44 GUARD RAIL DETAIL
SCALE: 1" = 1'- 0" ADT33021

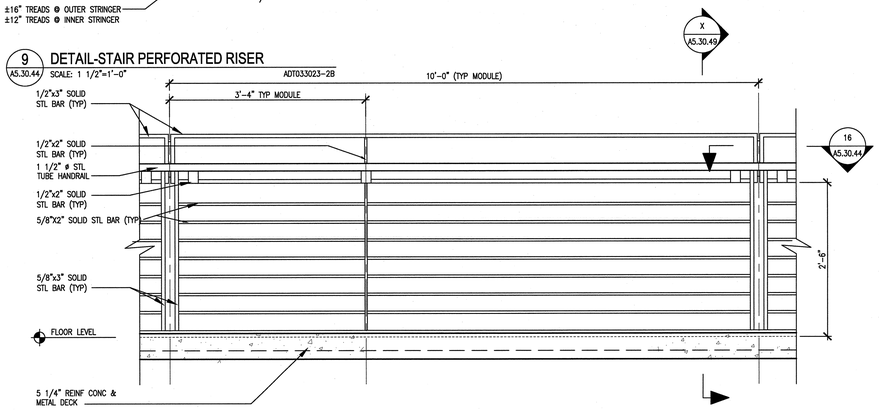

5 A5.30.44 GUARD RAIL DETAIL
SCALE: 1" = 1'- 0" ADT33021

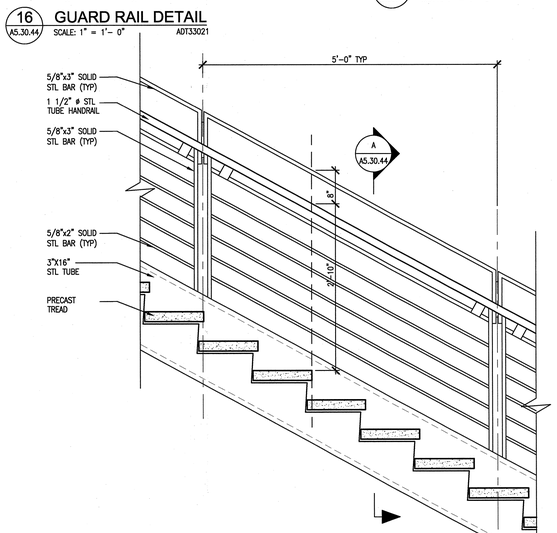

15 A5.30.44 ORNAMENTAL RAILING DETAIL
SCALE: 1" = 1'- 0" ADT033019-2B

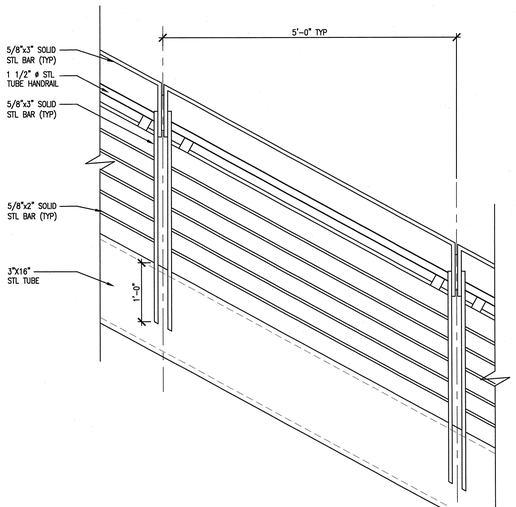

12 A5.30.44 ORNAMENTAL RAILING DETAIL
SCALE: 1" = 1'- 0" ADT033019-2B

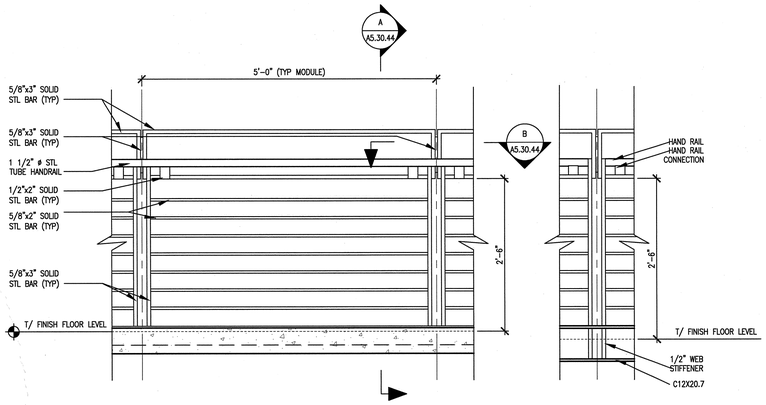

7 A5.30.44 ORNAMENTAL STAIR GUARD RAIL DETAIL
SCALE: 1" = 1'- 0" ADT033019-2B

6 A5.30.44 STAIR GUARD RAIL DETAIL
SCALE: 1" = 1'- 0" ADT033019-2B

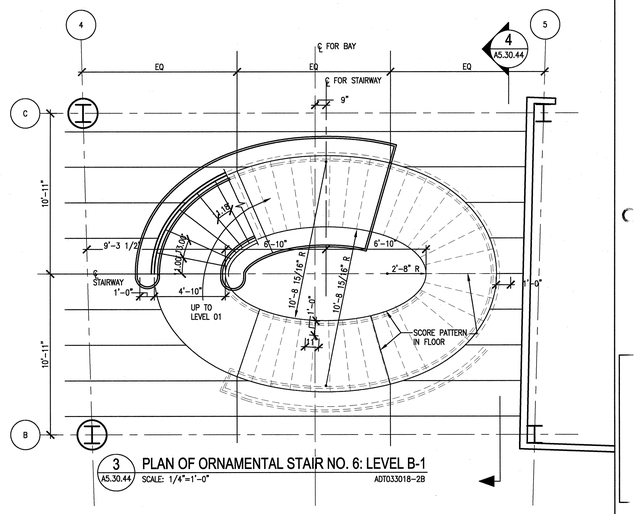

3 A5.30.44 PLAN OF ORNAMENTAL STAIR NO. 6: LEVEL B-1
SCALE: 1/4"=1'-0" ADT033018-2B

NO REPRESENTATION OR WARRANTY, EXPRESSED OR IMPLIED, IS MADE AS TO THE ACCURACY, COMPLETENESS OR USEFULNESS OF THE INFORMATION OR STATEMENTS CONTAINED IN THESE DRAWINGS, OR THAT THE USE OR DISCLOSURE OF ANY INFORMATION, APPARATUS, METHOD, OR PROCESS DISCLOSED IN THESE DRAWINGS MAY NOT INFRINGE PRIVATE RIGHTS OF OTHERS. NO LIABILITY IS ASSUMED WITH RESPECT TO THE USE OF, OR FOR DAMAGES RESULTING FROM THE USE OF ANY INFORMATION, APPARATUS, METHOD, OR PROCESS DISCLOSED IN THESE DRAWINGS. DRAWINGS MADE AVAILABLE FOR INFORMATION TO BIDDER ARE NOT TO BE USED FOR OTHER PURPOSES AND ARE TO BE RETURNED UPON REQUEST OF THE FORWARDING CONTRACTOR.

NUMBER OF SECTION OR DETAIL
DRAWING ON WHICH SECTION OR DETAIL IS SHOWN OR TAKEN
SECTION AND DETAIL KEY

THIS DOCUMENT CONTROLLED BY
CHANGE CONTROL SYSTEM 4
ENGINEERING PROCEDURE SNS-ENG-G001

REV	CHANGE TYPE	CHANGE CONTROL SYSTEM	CHANGE REQUEST NUMBER	DESCRIPTION (REVISION OR ISSUE PURPOSE)	CF	ED	DSN	CHK	DEPT	DATE	PE	DATE	PJ	DATE	REQ	DATE	UTB	DATE	RPE	RPE NO	DATE	SC	AW	WRS	RL	WRS	BWJ	--	WRS	--	WAS	ST	CV	EC	EE	EM	IE	M	PD	SE	AR
0				CERTIFIED FOR CONSTUCTION – MAY 15, 2001								7/14/01		7/14/01				7/16/01	RLB	102104	5/15/01																			

REVISION OR ISSUE PURPOSE — REVISION APPROVALS — SQUAD CHECK

RPE: ROBERT L. BARNES, REGISTERED ARCHITECT, NO. 102104, STATE OF TENNESSEE — 5/15/01

REV. 0 DATE 5/15/01 UTB 5/15/01 — DRAWING APPROVALS

DSN	H. BAUMAN	5/15/01
DRW	J. O'BRIEN	5/15/01
CHK	E. DENSON	5/15/01
DEPT		
PE		7/16/01
PJ		7/11/01
REQ		

108031400-A8E-8600-A088

Knight/Jacobs Joint Venture
701 Scarboro Road, MS 8253
Oak Ridge, TN 37830
865-241-9433
fax 865-241-3400

KNIGHT
Knight Advanced Technology
540 West Randolph Street
Chicago, IL 60661

UT-BATTELLE
Oak Ridge National Laboratory
managed for the DEPARTMENT OF ENERGY under
U.S. GOVERNMENT contract DE-AC05-00OR22725
UT-BATTELLE, LLC, ⊕ Oak Ridge, Tennessee

PROJECT NAME:
SPALLATION NEUTRON SOURCE
CENTRAL LAB AND OFFICE BUILDING
STAIRS & GUARD RAIL PLANS, ELEVATIONS & DETAILS STAIRS 6

1	48	49	50	PLANT	BLDG	FL	SH.	OF	TYPE	CLASS
3	A	X	X	8	8600		1	1	S	U
51		52		53	WBS					REV
NC		NA			1.8.3.14		A5.30.44			0

AutoCAD
Date: 05/01/2001 Time: 18:27:57
Drawing Number: ADT033019-2B
Drawing Name: C:\PROJECTS\SNS\DWG\ADT\ADT033019-2B.DWG