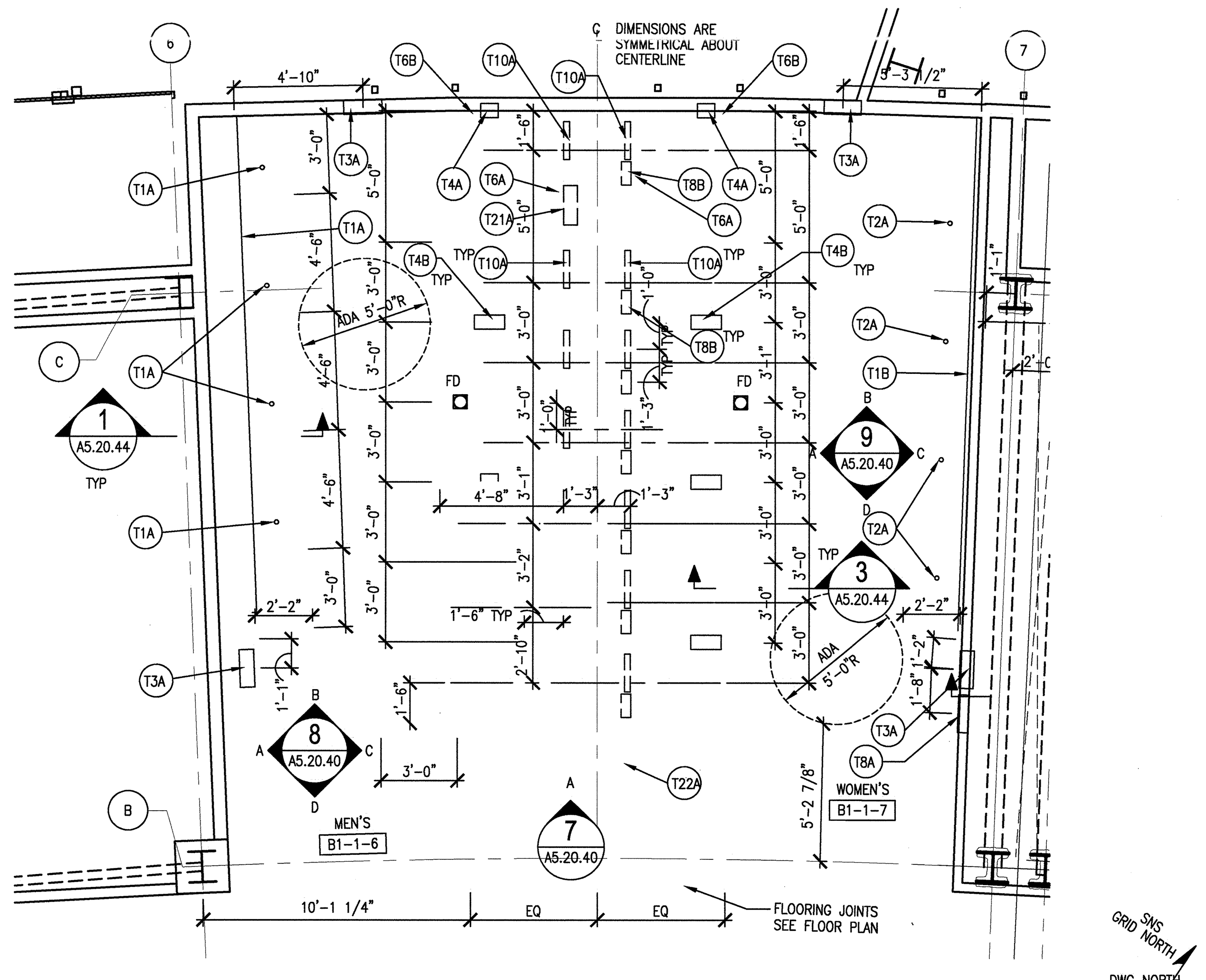

6 (A5.20.40) LEVEL B1 TOILET ROOM PLAN - ALTERNATE #1C
SCALE: 1/4"=1'-0" AEPB10-2B

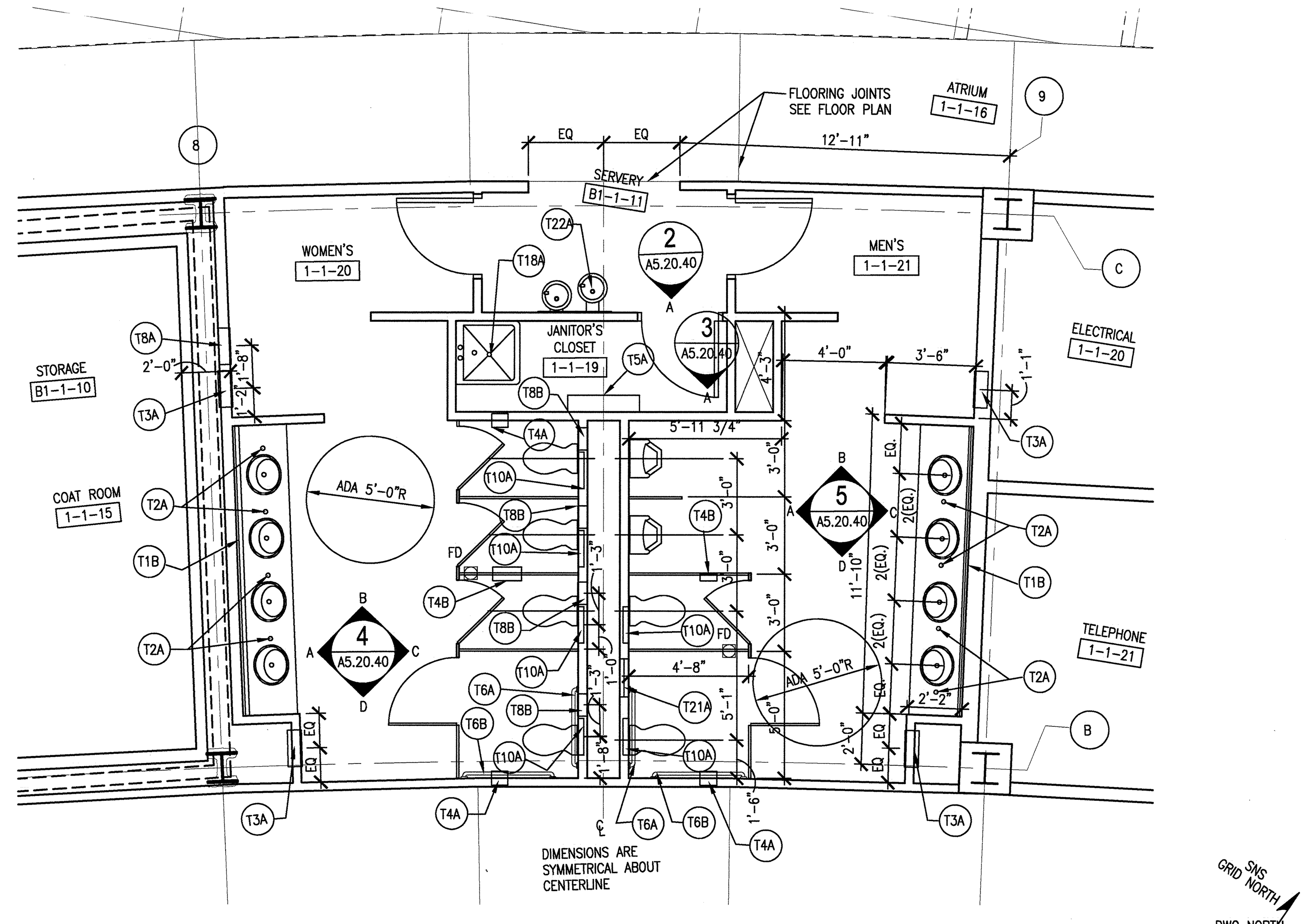

1 (A5.20.40) LEVEL 1 FLOOR TOILET ROOM PLAN
SCALE: 1/4"=1'-0" AEP010-2B

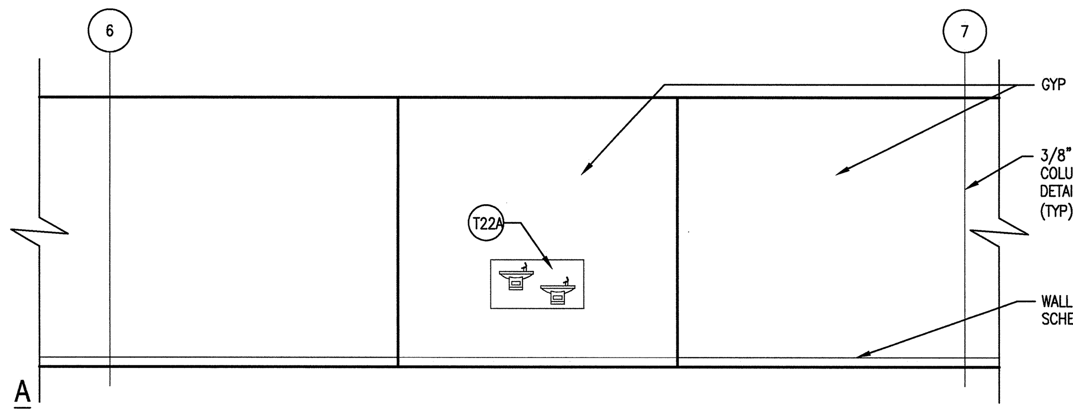

7 (A5.20.40) LEVEL B1 DRINKING FOUNTAIN ELEVATION - ALTERNATE #1C
SCALE: 1/4"=1'-0" AIE006-2B

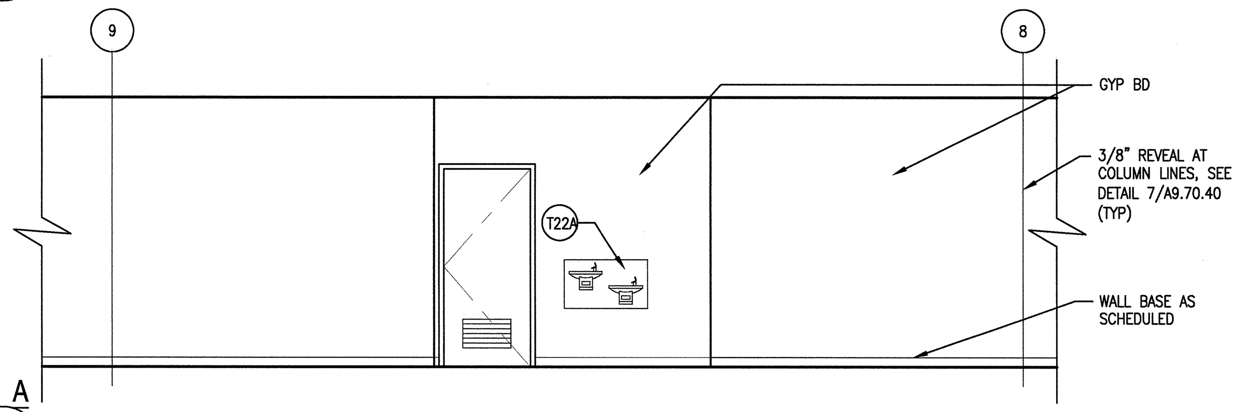

2 (A5.20.40) LEVEL 1 FLOOR ELEVATION AT DRINKING FOUNTAIN & JANITOR'S CLOSET
SCALE: 1/4"=1'-0" AIE006-2B

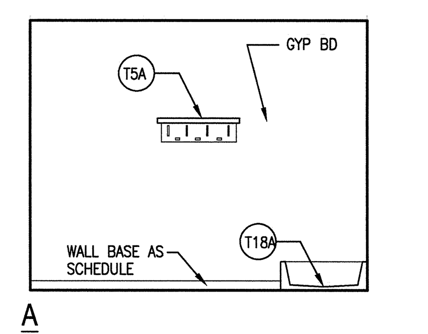

3 (A5.20.40) LEVEL 1 JANITOR'S CLOSET
SCALE: 1/4"=1'-0" AIE006-2B

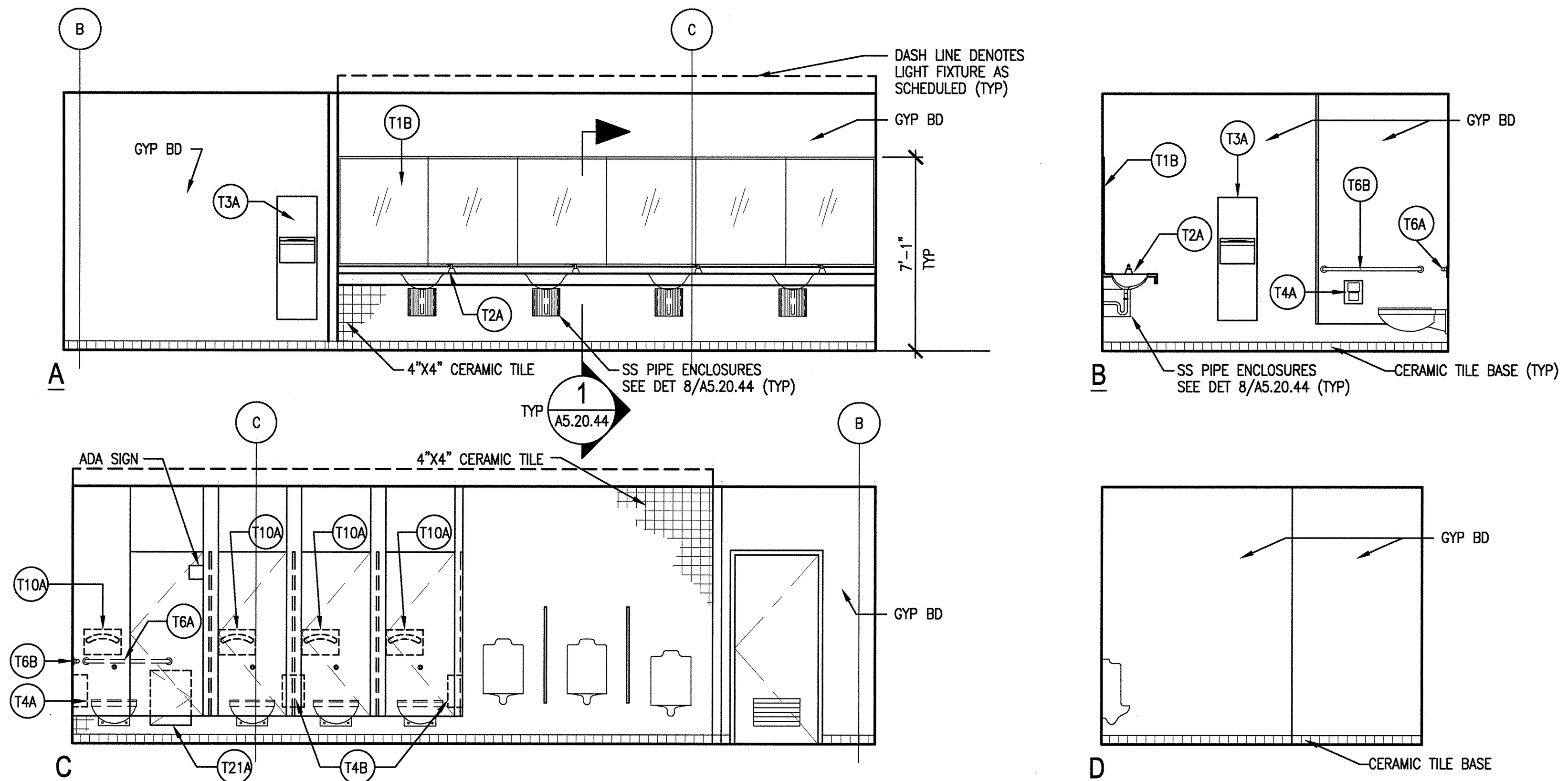

8 (A5.20.40) LEVEL B1 MEN'S TOILET ROOM ELEVATIONS - ALTERNATE #1C
SCALE: 1/4"=1'-0" AIE006-2B

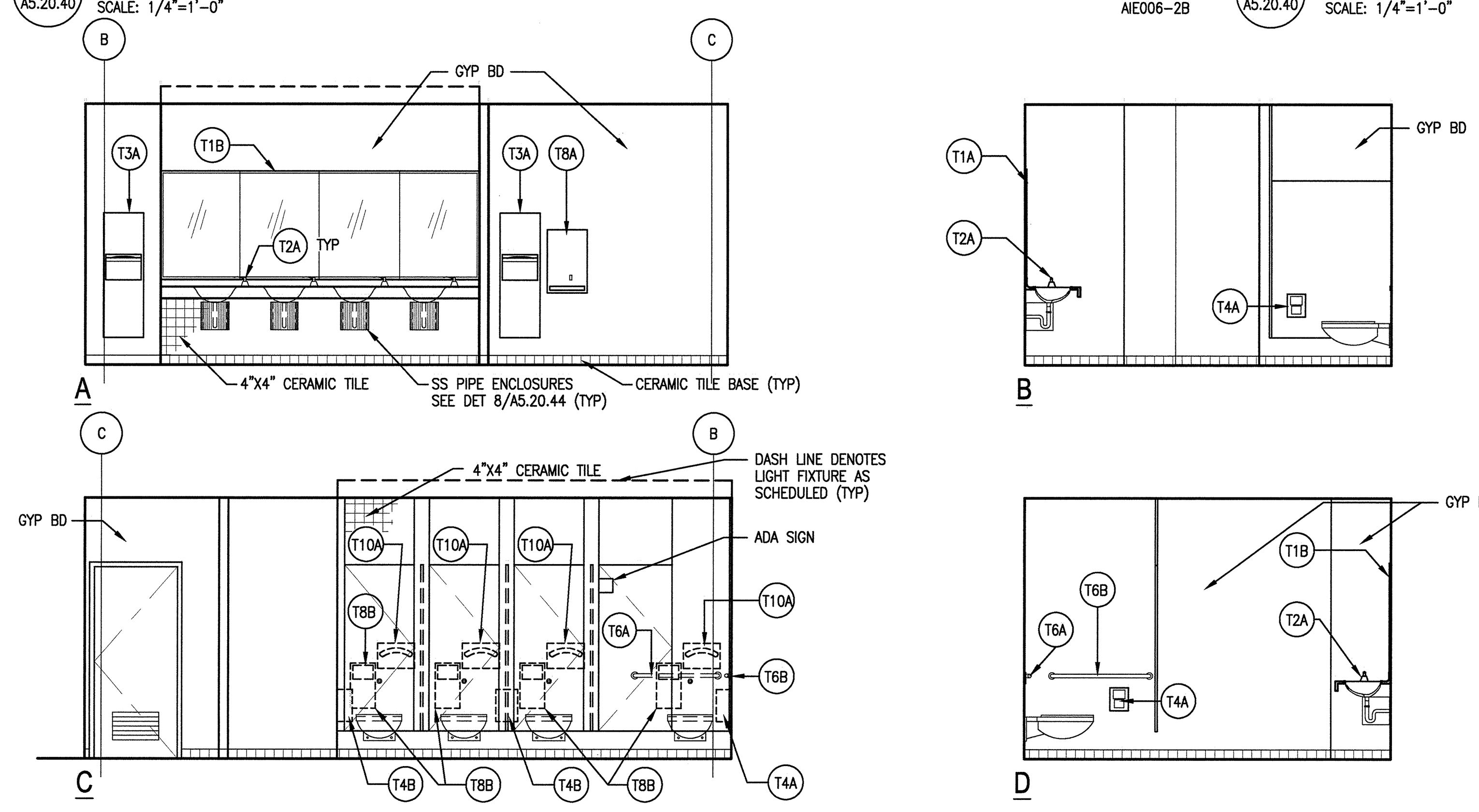

4 (A5.20.40) LEVEL 1 FLOOR WOMEN'S TOILET ROOM ELEVATIONS
SCALE: 1/4"=1'-0" AIE006-2B

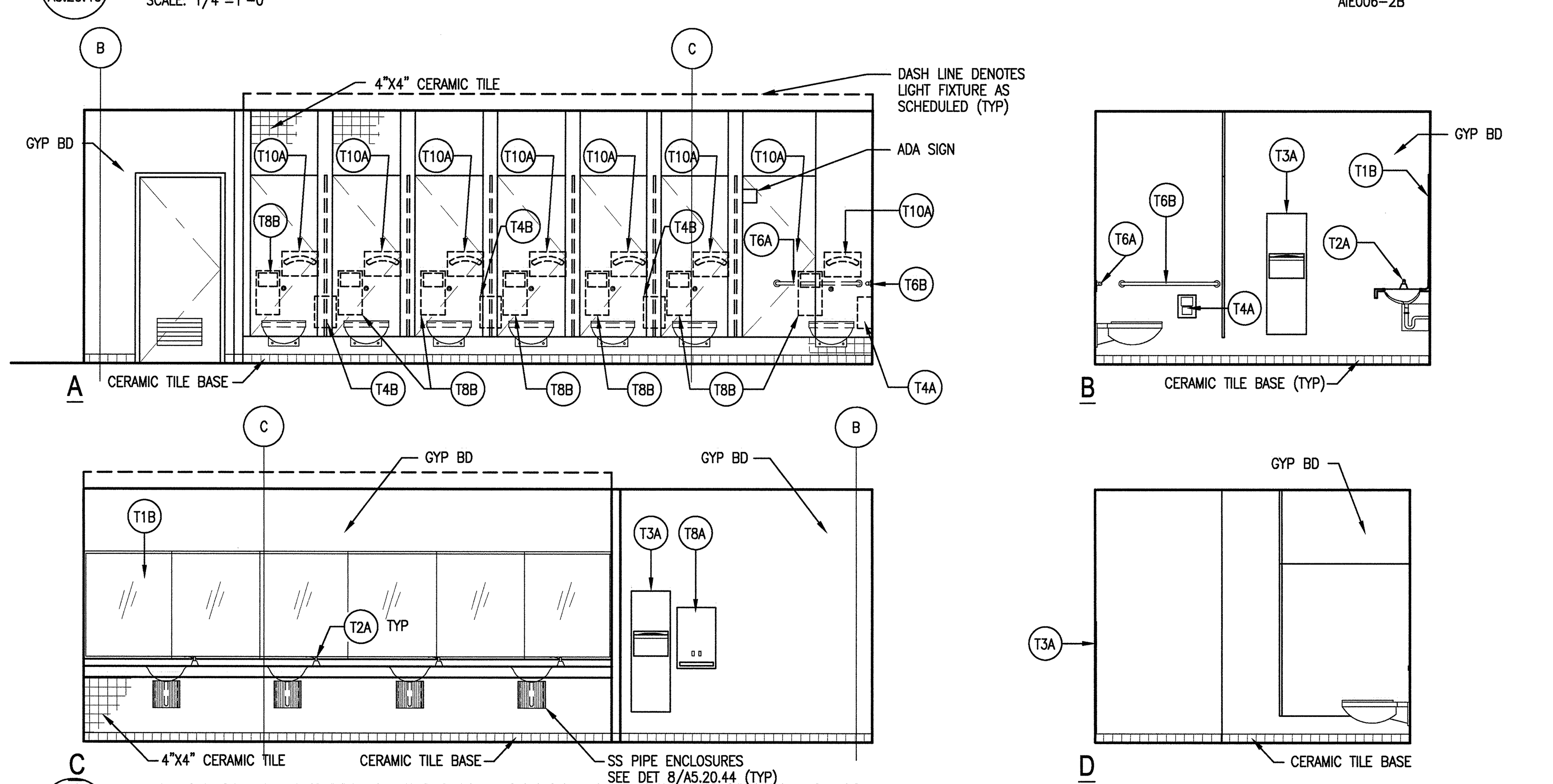

9 (A5.20.40) LEVEL B1 WOMEN'S TOILET ROOM ELEVATIONS - ALTERNATE #1C
SCALE: 1/4"=1'-0" AIE006-2B

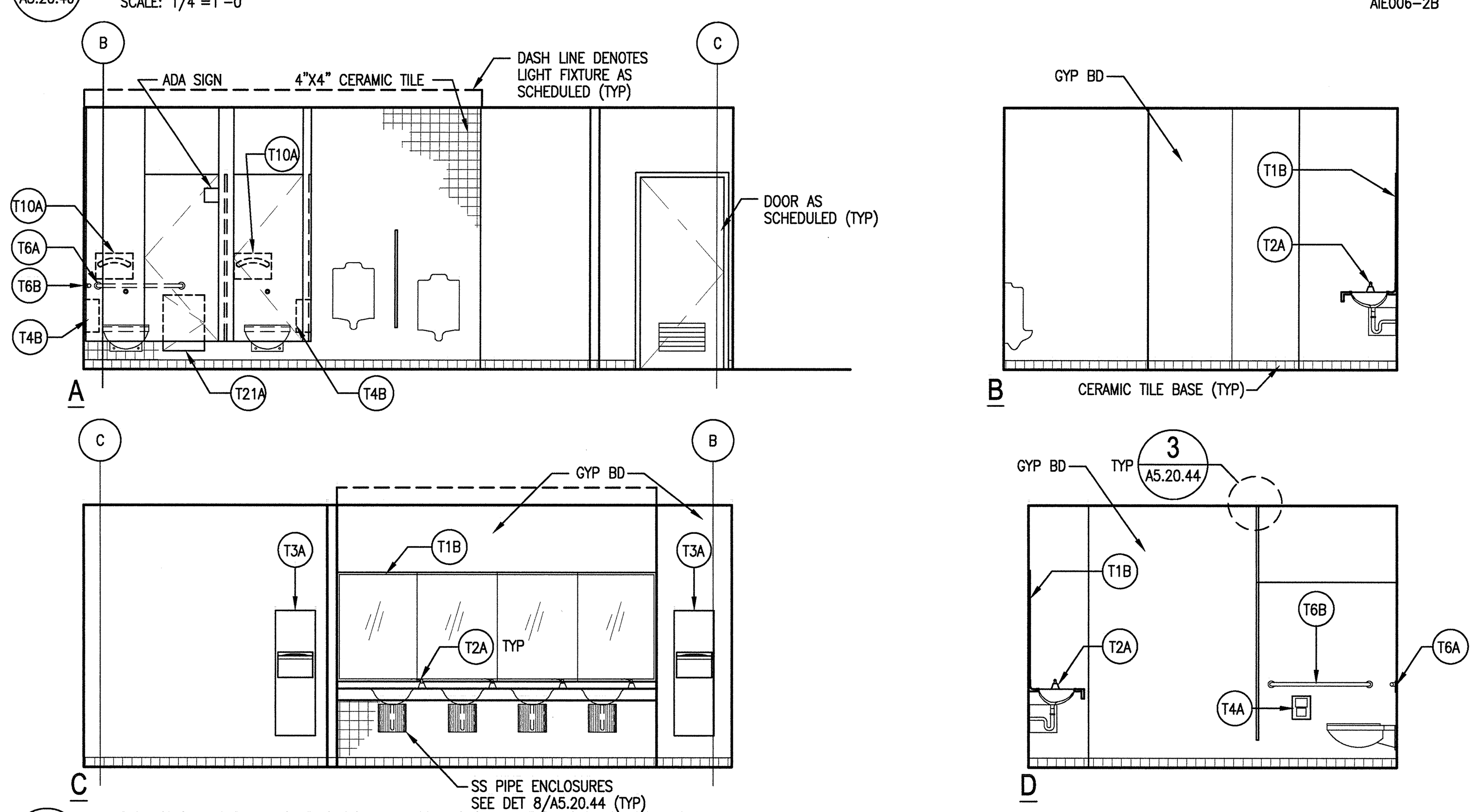

5 (A5.20.40) LEVEL 1 FLOOR MEN'S TOILET ROOM ELEVATIONS
SCALE: 1/4"=1'-0" AIE006-2B

ACCESSORIES SCHEDULE

MARK	DESCRIPTION	MANUFACTURER'S REFERENCE NUMBER	REMARKS
T1A	CHANNEL FRAME MIRROR (20"W x 36"H)	ASI-0620	–
T1B	WALL MIRROR W/STAINLESS STEEL FRAME	–	–
T2A	LAVATORY – MOUNTED SOAP DISPENSER	ASI-0332	–
T3A	RECESSED COMBINATION PAPER TOWEL DISPENSER AND WASTE RECEPTACLE	ASI-6462-2	–
T4A	RECESSED MOUNTED TWIN HIDE-A-ROLL TOILET TISSUE DISPENSER	ASI-0031	–
T4B	PARTITION MOUNTED DUAL HIDE-A-ROLL TOILET TISSUE DISPENSER	ASI-0032	–
T5A	UTILITY SHELF AND MOP HOLDER	ASI-1308-3	–
T6A	36" GRAB BAR, 1 1/2" DIA	ASI-3100-P x 36	–
T6B	42" GRAB BAR, 1 1/2" DIA	ASI-3100-P x 42	–
T6C	THREE – WALL GRAB BAR, W24" LEGS, 1 1/2" DIA	B-5807.99	–
T7A	SURFACE MOUNTED SHELF	B-295 x 16	SEE NOTE 9
T8A	RECESSED SANITARY NAPKIN AND TAMPON DISPENSER	ASI-6488	–
T8B	RECESSED SANITARY NAPKIN DISPOSAL UNIT	ASI-6471	–
T9A	SHOWER / DRESSING AREA SEAT	B-508	MOUNTING HT @ 1'-8" AFF
T10A	RECESSED TOILET SEAT COVER DISPENSER	ASI-6477	–
T11A	SURFACE MOUNTED STAINLESS STEEL ROBE HOOK	B-6707	SEE NOTE 8
T12A	STAINLESS STEEL SHOWER CURTAIN ROD, STN STL CURTAIN HOOKS, VINYL SHOWER CURTAIN	B-6047, B-204-1, B-204-2	SEE NOTE 4 AND 5
T13A	FOLDING SHOWER SEAT	B-5191	–
T14A	FLUSH MOUNTED WALL SHOWER W/ RECESSED SOAP DISH	–	AS SPECIFIED SEE SECTION 15440
T15A	ADA COMPLIANT RECESS MOUNTED WALL SHOWER W/ RECESSED SOAP DISH	–	AS SPECIFIED SEE SECTION 15440
T16A	3' X 3' PRECAST TERRAZZO SHOWER RECEPTOR	–	INTEGRAL SS TILING FLANGE
T17A	5' –0" X 2'-6" HANDICAPPED ACCESSABLE PRECAST TERRAZZO SHOWER RECEPTOR	–	INTEGRAL SS TILING FLANGE
T18A	3' X 3' PRECAST TERRAZZO MOP BASIN W/ INTEGRAL SS TILING FLANGE	–	2 SIDES PER CORNER INSTALLATION
T19A	LOCKERS	–	AS SPECIFIED SEE SECTION 10505
T20A	ACCESS DOOR (12" W X 24"H)	–	SEE NOTE 6
T21A	ACCESS DOOR (18" W X 24"H)	–	SEE NOTE 6
T22A	DRINKING FOUNTAINS	–	SEE NOTE 7
T23A	SUFACE MOUNTED SOAP DISPENSER	B-4112	–

ADT108010-2B

ACCSESSORIES SCHEDULE NOTES:

1. THE MANUFACTURERS LISTED ARE FOR REFERENCE ONLY TO GUIDE SELECTION OF PRODUCTS.
2. "ASI" IN THE MANUFACTURER REFERENCE NUMBER COLUMN OF THE ACCESSORIES SCHEDULE DENOTES AMERICAN SPECIALTIES, INC.
3. "B" IN THE MANUFACTURER REFERENCE NUMBER COLUMN OF THE ACCESSORIES SCHEDULE DENOTES BOBRICK EQUIPMENT, INC.
4. PROVIDE AND INSTALL TOTAL NUMBER OF CURTAIN HOOKS SPECIFIED FOR EACH SHOWER CURTAIN.
5. USE 70" WIDE SHOWER CURTAIN (B-204-3) AT HDCP SHOWER STALLS AND AT OPENING TO SHOWER AREAS.
6. AS SPECIFIED IN 08311. RECESSED PANEL DR AT CERAMIC TILE WALL – ALIGN TO FIT TILE GRID, B/ OPENING AT 8" AFF.
7. AS SPECIFIED IN 15440. FOR BI-LEVEL WATER COOLER'S MOUNTING HT = 3'-0" MAX TO T/SPIOGT PER ADA.
8. HOOK IN TO HDCP SHOWER, MOUNTING HT = 4'-0". ALL OTHER HOOKS, MOUNTING HT = 5'-6".
9. SHELF IN HDCP SHOWER STALL, MOUNT T/SHELF @ 3'-0" AFF. ALL OTHER SHELVES IN SHOWER STALLS MOUNT T/SHELF @ 4'-0" AFF.
10. WOOD BLOCKING AND METAL PLATE BACKING IS REQUIRE IN STEEL STUD AND GYPSUM WALLS FOR ALL ITEMS THAT ARE ATTACHED TO THE WALL.

SHEET PLAN NOTES:

1. SEE SHEET A5.20.45 FOR TYPICAL FIXTURE MOUNTING HEIGHTS, CLEARANCE, LOCATIONS, AND STALL LAYOUTS.
2. DIMENSION LOCATIONS OF ACCESSORIES ARE TYPICAL, UNO.
3. REFER TO PLUMBING DRAWINGS FOR FIXTURES LOCATIONS.
4. FLOOR DRAINS IN TOILET ROOMS SHALL BE CENTERED UNDER (CENTERED ON) TOILET PARTITIONS, AND 6" BEHIND STILE.
5. FURNISH AND INSTALL SILICONE SANITARY SEALANT WITH ALL PLUMBING FIXTURES.

4' 2' 0 4' 8'
SCALE: 1/4" = 1'-0"

NO REPRESENTATION OR WARRANTY, EXPRESSED OR IMPLIED, IS MADE AS TO THE ACCURACY, COMPLETENESS OR USEFULNESS OF THE INFORMATION OR STATEMENTS CONTAINED IN THESE DRAWINGS, OR THAT THE USE OR DISCLOSURE OF ANY INFORMATION, APPARATUS, METHOD, OR PROCESS DISCLOSED IN THESE DRAWINGS MAY NOT INFRINGE PRIVATE RIGHTS OF OTHERS. NO LIABILITY IS ASSUMED WITH RESPECT TO THE USE OF, OR FOR DAMAGES RESULTING FROM THE USE OF ANY INFORMATION, APPARATUS, METHOD, OR PROCESS DISCLOSED IN THESE DRAWINGS. DRAWINGS MADE AVAILABLE FOR INFORMATION TO BIDDER ARE NOT TO BE USED FOR OTHER PURPOSES AND ARE TO BE RETURNED UPON REQUEST OF THE FORWARDING CONTRACTOR.

SECTION AND DETAIL KEY
NUMBER OF SECTION OR DETAIL
DRAWING ON WHICH SECTION OR DETAIL IS SHOWN OR TAKEN

THIS DOCUMENT CONTROLLED BY
CHANGE CONTROL SYSTEM 4
ENGINEERING PROCEDURE SNS-ENG-G001

REV	CHANGE TYPE	CHANGE CONTROL SYSTEM	CHANGE REQUEST NUMBER	DESCRIPTION	DSN	CHK	DEPT	DATE	PE	DATE	PJ	DATE	REQ	DATE	UTB	DATE	RPE	RPE NO	DATE	ST	CV	EC	EE	EM	IE	M	PD	SE	AR
1				CERTIFIED FOR CONSTRUCTION – 12/20/01	CF	ED			[signature]	12/01	[signature]	12/01			[signature]	12/26/01	RLB	102104	12/20/01	RW	AW	BWJ	PD	BWJ	BWJ	--	BWJ	--	ED
0	–	–	–	CERTIFIED FOR CONSTRUCTION – MAY 15, 2001	CF	ED			CLG	9/6/01	JS	8/21/01			JRL	9/25/01	RLB	102104	5/15/01	SC	AW	WRS	RL	WRS	BWJ	--	WRS	--	WAS

REVISION OR ISSUE PURPOSE — REVISION APPROVALS — SQUAD CHECK

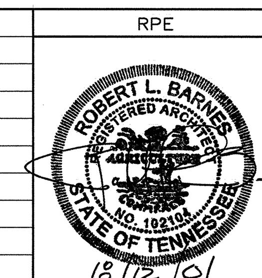

RPE		
DSN	H. BAUMAN	5/15/01
DRW	A. OWENS	5/15/01
CHK	E. DENSON	5/15/01
DEPT		
PE	C.L. GARREN	9/6/01
PJ	J. STELLERN	8/21/01
REQ		
UTB	J.R. LAWSON	9/25/01

REV. DATE — DRAWING APPROVALS

108031400-A8E-8600-A078

Knight/Jacobs
Knight/Jacobs Joint Venture
701 Scarboro Road, MS 8253
Oak Ridge, TN 37830
865-241-9433
fax 865-241-3400

KNIGHT
Knight Advanced Technology
549 West Randolph Street
Chicago, IL 60661

UT-BATTELLE
Oak Ridge National Laboratory
managed for the DEPARTMENT OF ENERGY under
U.S. GOVERNMENT contract DE-AC05-00OR22725
UT-BATTELLE, LLC, © Oak Ridge, Tennessee

PROJECT NAME:

SPALLATION NEUTRON SOURCE

CENTRAL LAB AND OFFICE BUILDING ENLARGED TOILET ROOM PLANS & ELEVATIONS

1	48	49	50	PLANT	BLDG	FL	SH.	OF	TYPE	CLASS
3	A	X	X	8	8600		1	1	S	U
51 NC		52 NA		53	WBS 1.8.3.14	A5.20.40				REV 1