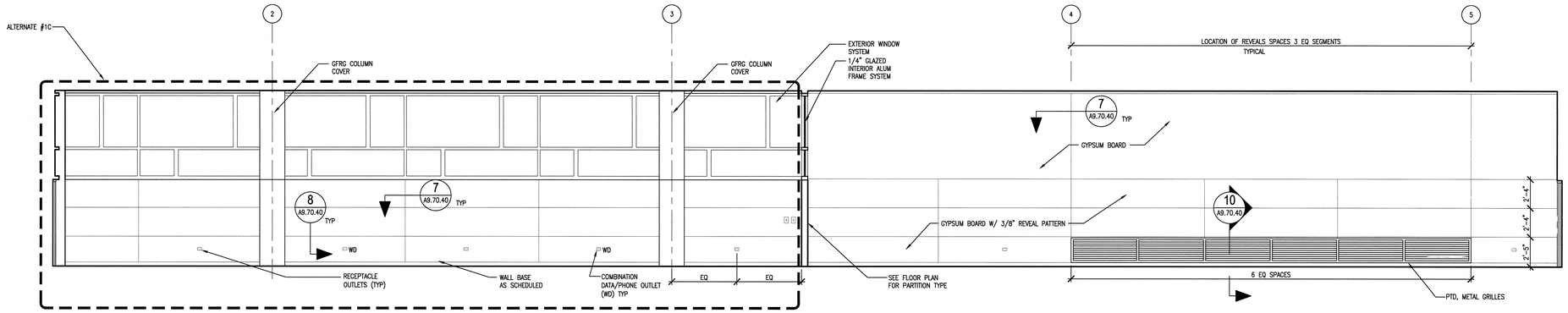

1 A5.10.46 LOWER LOBBY & GALLERY - NORTH ELEVATION

SCALE 1/4" = 1'-0"

AIE060-2B

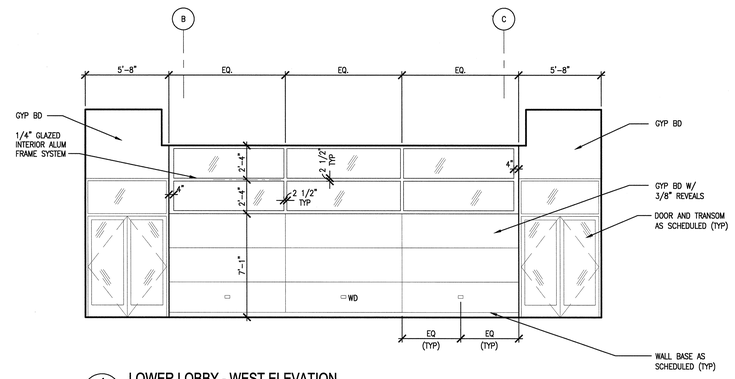

4 A5.10.46 LOWER LOBBY - WEST ELEVATION

SCALE 1/4" = 1'-0"

AIE060-2B

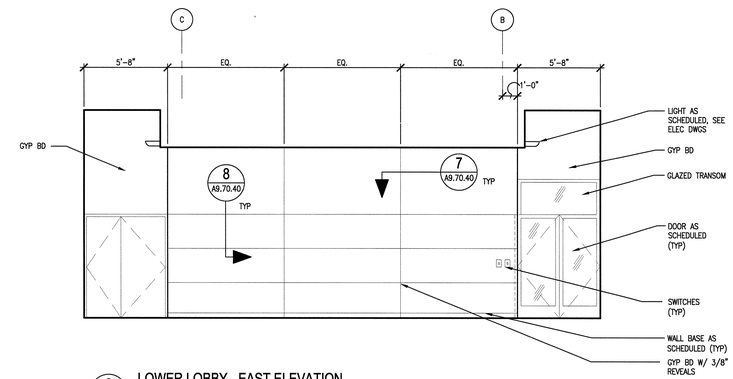

2 A5.10.46 LOWER LOBBY - EAST ELEVATION

SCALE 1/4" = 1'-0"

AIE060-2B

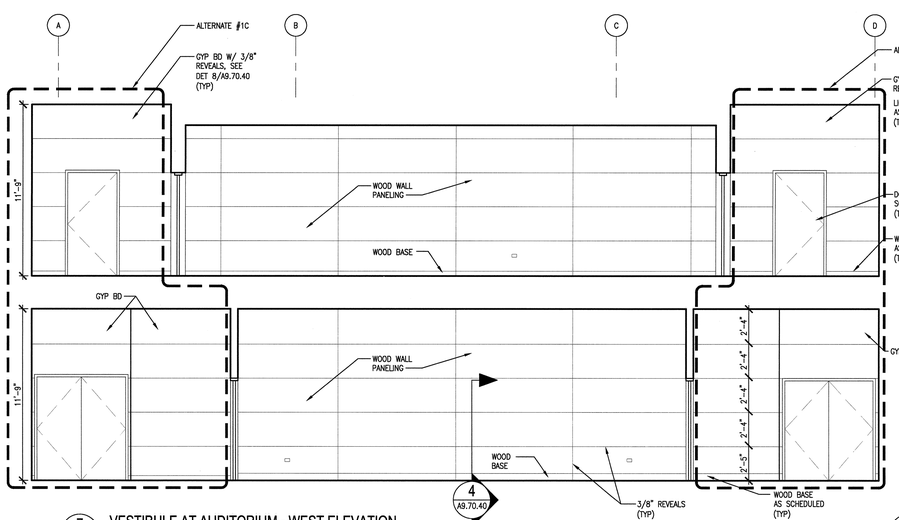

7 A5.10.46 VESTIBULE AT AUDITORIUM - WEST ELEVATION

SCALE 1/4" = 1'

AIE060-2B

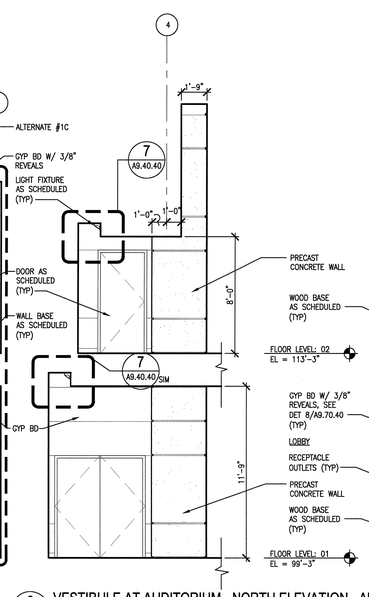

6 A5.10.46 VESTIBULE AT AUDITORIUM - NORTH ELEVATION - ALTERNATE #1C

SCALE 1/4" = 1'-0"

AIE060-2B

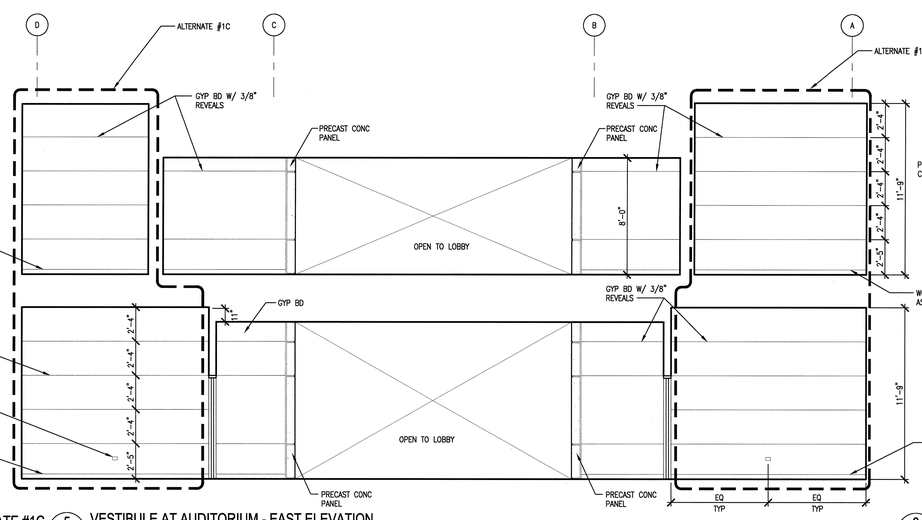

5 A5.10.46 VESTIBULE AT AUDITORIUM - EAST ELEVATION

SCALE 1/4" = 1'-0"

AIE060-2B

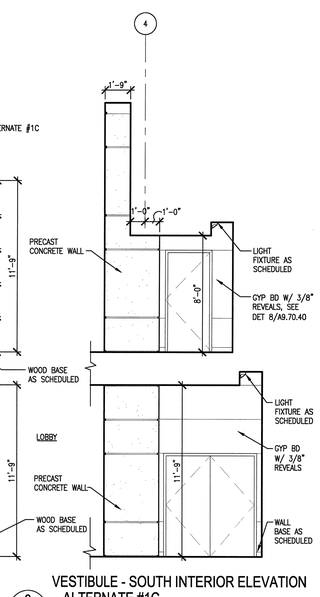

3 A5.10.46 VESTIBULE - SOUTH INTERIOR ELEVATION - ALTERNATE #1C

SCALE 1/4" = 1'-0"

AIE060-2B

4' 2' 0 4' 8'

SCALE: 1/4" = 1'-0"

SHEET NOTES:

1. SEE SHEET A5.20.45 FOR TYPICAL ELECTRICAL, COMMUNICATIONS AND DEVICES MOUNTING HEIGHTS.
2. WOOD BLOCKING AND METAL PLATE BACKING IS REQUIRED IN STEEL STUD AND CYPSUM WALLS FOR ALL ITEMS THAT ARE ATTACHED TO THE WALL.
3. ALL DOORS AND ADJACENT SIDE LITES WHOSE NEAREST VERTICAL EDGE IS WITHIN 4'-0" FROM A DOOR IN A CLOSED POSTION, SHALL BE GLAZED WITH TEMPERED GLASS TO THE FULL HEIGHT OF THE DOOR.
4. [T] DENOTES 1/4" CLEAR, FULLY TEMPERED SAFETY GLASS.
5. REFER TO ELECTRICAL AND ELECTRICAL DRAWINGS FOR THERMOSTAT, RECEPTACLE OUTLETS, DATA/PHONE OUTLETS, ETC.

108031400-A8E-8600-A184

Knight Jacobs Joint Venture
701 Scarboro Road, MS 8253
Oak Ridge, TN 37830
865-241-9433
fax 865-241-3400

KNIGHT
Knight Advanced Technology
240 West Hendolph Street
Chicago, IL 60661

Oak Ridge National Laboratory
managed for the DEPARTMENT OF ENERGY under
U.S. GOVERNMENT contract DE-AC05-00OR22725
UT-BATTELLE, LLC. © Oak Ridge, Tennessee

PROJECT NAME:
SPALLATION NEUTRON SOURCE
CENTRAL LAB AND OFFICE BUILDING
LOWER LOBBY & VESTIBULE ELEVATIONS

1	48	49	50	PLANT	BLDG	FL	SH.	OF	TYPE	CLASS
3	A	X	X	8	8600		1	1	S	U

51	52	53			
NC	NA		WBS 1.8.3.14	A5.10.46	REV 1

REV	CHANGE TYPE	CHANGE CONTROL SYSTEM	CHANGE REQUEST NUMBER	DESCRIPTION	DSN	CHK	DEPT	DATE	PE	DATE	PJ	DATE	REQ	DATE	UTB	DATE	RPE	RPE NO	DATE
1				CERTIFIED FOR CONSTRUCTION - 12/20/01	CF	ED				12/20/01		12/20/01		12/20/01		12/20/01	RLB	102104	12/20/01
0	-	-	-	CERTIFIED FOR CONSTRUCTION - MAY 15, 2001	CF	ED			CLG	9/6/01	US	8/21/01			JRL	9/25/01	RLB	102104	5/15/01

REVISION OR ISSUE PURPOSE — REVISION APPROVALS

RW	AW	BWJ	PD	BWJ	BWJ	--	BWJ	--	ED			
SC	AW	WRS	RL	WRS	BWJ	--	WRS	--	WAS			
ST	CV	EC	EE	EM	IE	M	PD	SE	AR			

SQUAD CHECK

RPE: ROBERT L. BARNES, REGISTERED ARCHITECT, STATE OF TENNESSEE, 102104, 12/12/01

DSN	H. BAUMAN	5/15/01
DRW	H. MAK	5/15/01
CHK	E. DENSON	5/15/01
DEPT		
PE	C.L. GARREN	9/6/01
PJ	J. STELLERN	8/21/01
REQ		
UTB	J.R. LAWSON	9/25/01

REV. DATE — DRAWING APPROVALS

NO REPRESENTATION OR WARRANTY, EXPRESSED OR IMPLIED, IS MADE AS TO THE ACCURACY, COMPLETENESS OR USEFULNESS OF THE INFORMATION OR STATEMENTS CONTAINED IN THESE DRAWINGS, OR THAT THE USE OR DISCLOSURE OF ANY INFORMATION, APPARATUS, METHOD, OR PROCESS DISCLOSED IN THESE DRAWINGS MAY NOT INFRINGE PRIVATE RIGHTS OF OTHERS. NO LIABILITY IS ASSUMED WITH RESPECT TO THE USE OF, OR FOR DAMAGES RESULTING FROM THE USE OF ANY INFORMATION, APPARATUS, METHOD, OR PROCESS DISCLOSED IN THESE DRAWINGS. DRAWINGS MADE AVAILABLE FOR INFORMATION TO BIDDER ARE NOT TO BE USED FOR OTHER PURPOSES AND ARE TO BE RETURNED UPON REQUEST OF THE FORWARDING CONTRACTOR.

NUMBER OF SECTION OR DETAIL
DRAWING ON WHICH SECTION OR DETAIL IS SHOWN OR TAKEN
SECTION AND DETAIL KEY

THIS DOCUMENT CONTROLLED BY
CHANGE CONTROL SYSTEM 4
ENGINEERING PROCEDURE SNS-ENG-0001

Date: 12/15/2001 Time: 13:13:35
Username: BWJOR
CH-17_VOL2\PROJECTS\8600\700_CAD\AE06_2B\140_PLOT\A5-10-46.DWG