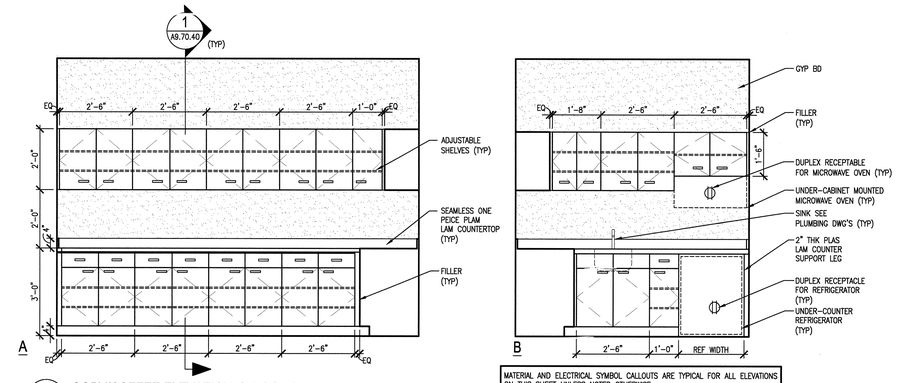

MATERIAL AND ELECTRICAL SYMBOL CALLOUTS ARE TYPICAL FOR ALL ELEVATIONS ON THIS SHEET UNLESS NOTED OTHERWISE.

1 A5.10.44 COPY/COFFEE ELEVATION @ ROOMS B1-3-58
SCALE: 1/2"=1'-0"
AIE005-2B

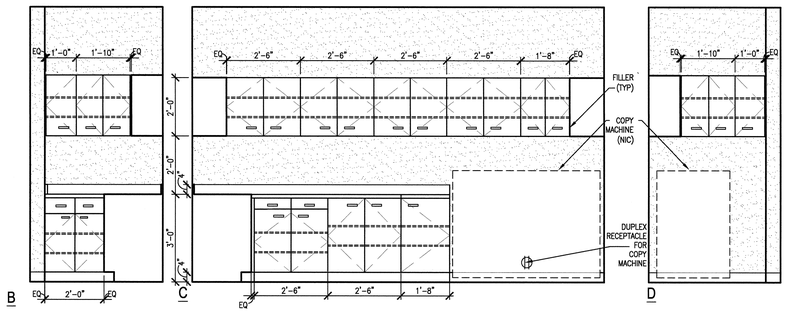

11 A5.10.44 COPY ROOM ELEVATION @ ROOM 1-3-89 & 2-3-109; 3-3-119 (ALTERNATE - 1A)
SCALE: 1/2"=1'-0"
AIE005-2B

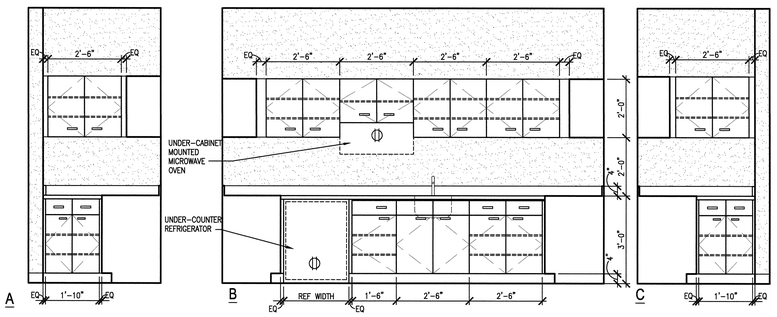

8 A5.10.44 COFFEE ROOM ELEVATION @ ROOM 1-3-85 & 2-3-119; 3-3-118)ALTERNATE - 1A)
SCALE: 1/2"=1'-0"
AIE005-2B

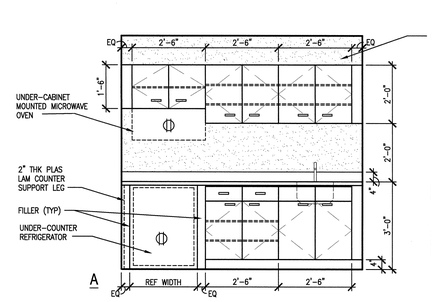

5 A5.10.44 COFFEE ROOM ELEVATION @ ROOMS 2-1-11, 3-1-8 AND 4-1-53
SCALE: 1/2"=1'-0"
AIE005-2B

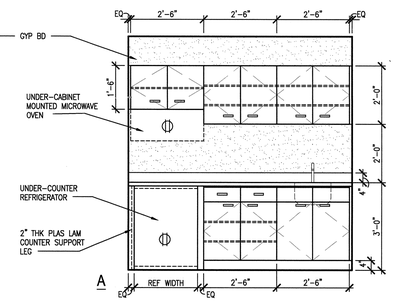

2 A5.10.44 COFFEE ROOM ELEV @ ROOMS 1-2-64, 2-2-71, 3-2-70 AND 4-2-97
SCALE: 1/2"=1'-0"
AIE005-2B

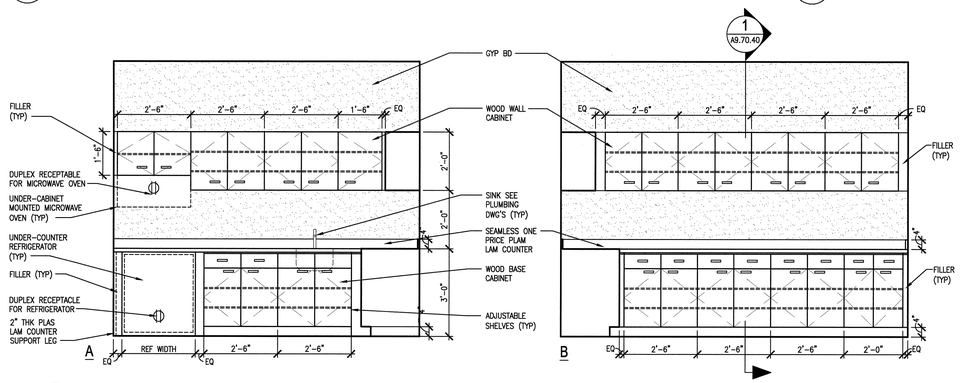

12 A5.10.44 COFFEE/COPY ROOM ELEVATION @ ROOM 4-1-10
SCALE: 1/2"=1'-0"
AIE005-2B

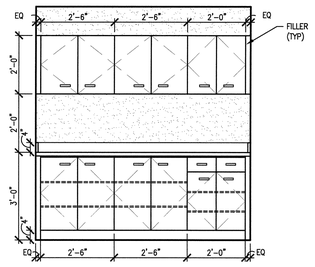

9 A5.10.44 COPY/ STORAGE ELEVATION @ ROOM 2-2-47, 3-2-47, 4-2-96
SCALE: 1/2"=1'-0"
AIE005-2B

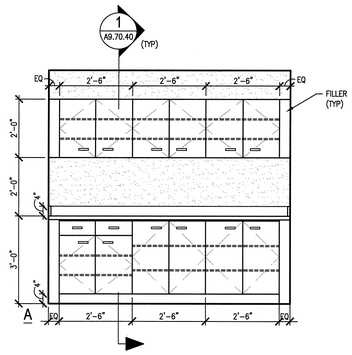

6 A5.10.44 TYPICAL COPY ROOM ELEVATION @ ROOMS 2-1-12, 3-1-17, AND 4-1-52
SCALE: 1/2"=1'-0"
AIE005-2B

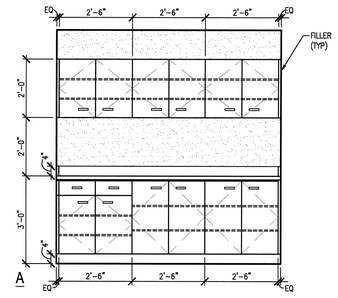

4 A5.10.44 COPY ROOM ELEVATION @ ROOM 1-2-40
SCALE: 1/2"=1'-0"
AIE005-2B

SHEET NOTES:

1. SEE SHEET A5.20.45 FOR TYPICAL ELECTRICAL, COMMUNICATIONS AND DEVICES MOUNTING HEIGHTS.
2. GENERAL CONTRACTOR = G.C.
3. G.C. IS TO VERIFY ALL DIMENSIONS AND CONDITIONS AT THE JOB SITE, PRIOR TO FABRICATING CASE WORK AND COUNTERS.
4. ALL FILLERS, SCRIBES, PANELS, ENCLOSURES, SUPPORTS, ETC., NECESSARY FOR A COMPLETE AND FINISHED INSTALLATION ARE TO BE FURNISHED BY G.C. EVEN WHEN NOT SPECIFICALLY CALLED OUT
5. ALL SHELVES ARE TO BE THE FULL DEPTH OF THE CABINET. SHELVES 36" OR GREATER IN WIDTH ARE TO BE REINFORCED.
6. ALL EXPOSED ENDS OF CABINETS ARE TO BE FINISHED.
7. REFER TO ELECTRICAL AND PLUMBING DRAWINGS FOR OUTLETS, PHONE OUTLETS, DATA/PHONE OUTLETS, DRAINS, VENTS, ETC.
8. ALL COUNTERTOPS AGAINST WALLS ARE TO BE PROVIDED WITH 3/4" x 4" HIGH BACK AND SIDE SPLASHES UNLESS OTHERWISE NOTED.
9. COUNTERTOPS AND SPLASHES SHALL BE SCRIBED TO MATCH IRREGULARITIES AND CONTOURS OF WALLS.
10. ALL COUNTERTOPS, WALL CABINETS AND BASE CABINETS ARE TO BE PLASTIC LAMINATE UNLESS NOTED OTHERWISE.
11. COORDINATE INSTALLATION OF CASE WORK WITH INSTALLATION OF FLOORING.
12. ALL EXPOSED CORNERS ON COUNTERTOPS ARE TO BE ROUNDED. IE; RADIUSED OR EASED.
13. MICROWAVE AND REFRIGERATOR SEE SPECIFICATION SECTION 11451 RESIDENTIAL APPLIANCE.

2' 1' 0 2' 4'
SCALE: 1/2" = 1'-0"

108031400-A8E-8600-A182

Knight Jacobs

Knight/Jacobs Joint Venture
701 Scarboro Road, MS 8253
Oak Ridge, TN 37830
865-241-9433
fax 865-241-3400

KNIGHT
Knight Advanced Technology
320 West Brandon Street
Chicago, IL 60661

UT-BATTELLE

Oak Ridge National Laboratory
managed for the DEPARTMENT OF ENERGY under
U.S. GOVERNMENT contract DE-AC05-00OR22725
UT-BATTELLE, LLC. • Oak Ridge, Tennessee

PROJECT NAME:
SPALLATION NEUTRON SOURCE
CENTRAL LAB AND OFFICE BUILDING
COFFEE & COPIER ROOMS
ELEVATIONS

1	48	49	50	PLANT	BLDG	FL	SH.	OF	TYPE	CLASS
3	A	X	X	8	8600		1	1	S	U

51	52	53	WBS		REV
NC	NA		1.8.3.14	A5.10.44	1

REV	CHANGE TYPE	CHANGE CONTROL SYSTEM	CHANGE CONTROL NUMBER	DESCRIPTION	DSN	CHK	DEPT
1				CERTIFIED FOR CONSTRUCTION – 12/20/01	CF	ED	
0	–	–	–	CERTIFIED FOR CONSTRUCTION – MAY 15, 2001	CF	ED	

REVISION OR ISSUE PURPOSE

DATE	PE	DATE	PJ	DATE	REQ	DATE	UTB	DATE	RPE	RPE NO	DATE
	CLG	9/6/01	JS	8/21/01			JRL	9/25/01	RLB	102104	5/15/01
									RLB	102104	12/20/01

REVISION APPROVALS

ST	CV	EC	EE	EM	IE	M	PD	SE	AR
SC	AW	WRS	RL	WRS	BWJ	--	WRS	--	WAS
RW	AW	BWJ	PD	BWJ	BWJ	--	BWJ	--	ED

SQUAD CHECK

RPE
ROBERT L. BARNES REGISTERED ARCHITECT NO. 102104 STATE OF TENNESSEE
8/2/01

REV.	DATE			
		DSN	H. BAUMAN	5/15/01
		DRW	A. OWENS	5/15/01
		CHK	E. DENSON	5/15/01
		DEPT		
		PE	C.L. GARREN	9/6/01
		PJ	J. STELLERN	8/21/01
		REQ		
		UTB	J.R. LAWSON	9/25/01

DRAWING APPROVALS

NO REPRESENTATION OR WARRANTY, EXPRESSED OR IMPLIED, IS MADE AS TO THE ACCURACY, COMPLETENESS OR USEFULNESS OF THE INFORMATION OR STATEMENTS CONTAINED IN THESE DRAWINGS, OR THAT THE USE OR DISCLOSURE OF ANY INFORMATION, APPARATUS, METHOD, OR PROCESS DISCLOSED IN THESE DRAWINGS MAY NOT INFRINGE PRIVATE RIGHTS OF OTHERS. NO LIABILITY IS ASSUMED WITH RESPECT TO THE USE OF, OR FOR DAMAGES RESULTING FROM THE USE OF ANY INFORMATION, APPARATUS, METHOD, OR PROCESS DISCLOSED IN THESE DRAWINGS. DRAWINGS MADE AVAILABLE FOR INFORMATION TO BIDDER ARE NOT TO BE USED FOR OTHER PURPOSES AND ARE TO BE RETURNED UPON REQUEST OF THE FORWARDING CONTRACTOR.

NUMBER OF SECTION OR DETAIL
DRAWING ON WHICH SECTION OR DETAIL IS SHOWN OR TAKEN
SECTION AND DETAIL KEY

THIS DOCUMENT CONTROLLED BY
CHANGE CONTROL SYSTEM 4
ENGINEERING PROCEDURE SNS-ENG-G001

Date: 12/18/2001 Time: 13:13:05
Username: BWJOB
CH-I:_WILDFIRE6000\1000\100\0007\004_DR\A5.10.44_PLOT.dgn-10-44.DWG

AutoCAD