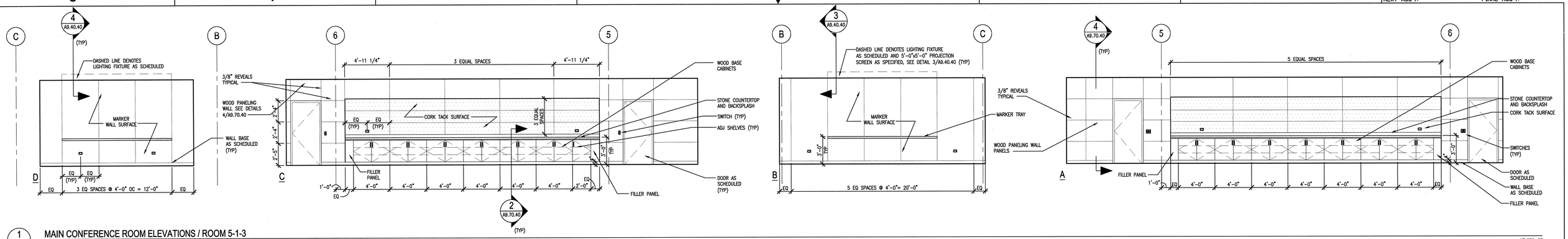


1 A5.10.41 MAIN CONFERENCE ROOM ELEVATIONS / ROOM 5-1-3

SCALE: 1/4"=1'-0"

AEL050-2B

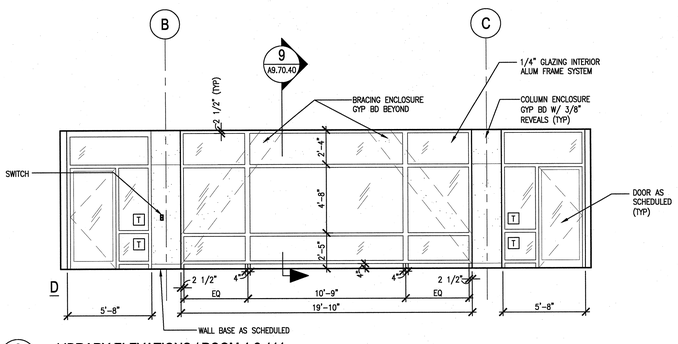


2 A5.10.41 LIBRARY ELEVATIONS / ROOM 4-2-111

SCALE: 1/4"=1'-0"

AEL050-2B

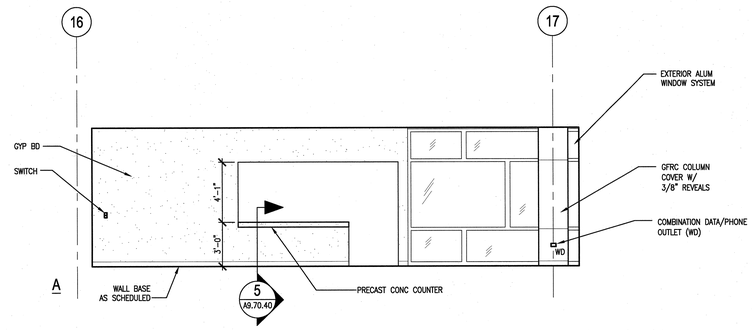


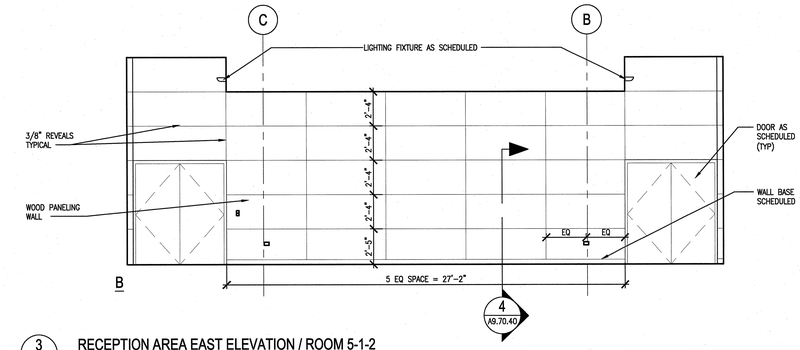


3 A5.10.41 RECEPTION AREA EAST ELEVATION / ROOM 5-1-2

SCALE: 1/4"=1'-0"

AEL050-2B

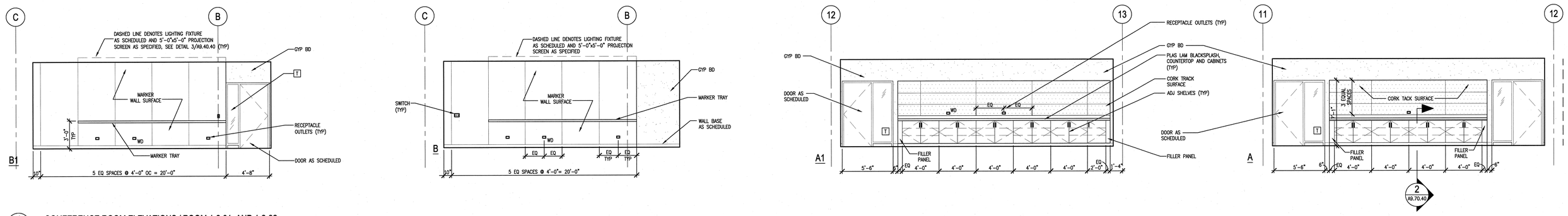


4 A5.10.41 CONFERENCE ROOM ELEVATIONS / ROOM 1-2-31, AND 1-2-32

SCALE: 1/4"=1'-0"

AEL050-2B

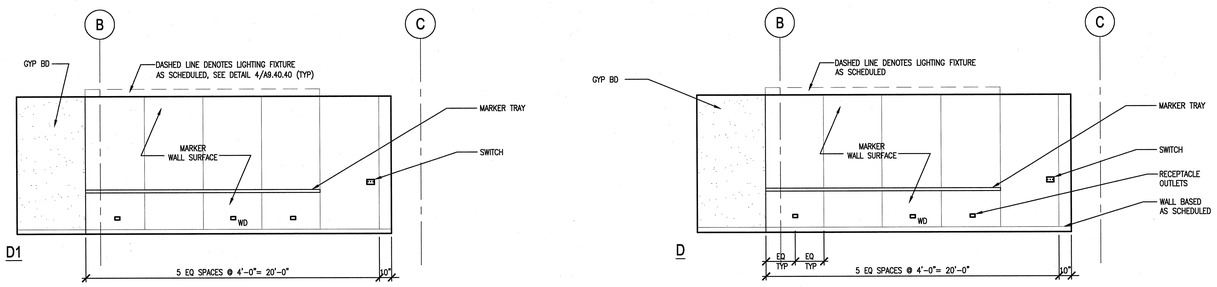


5 A5.10.41 CONFERENCE ROOM ELEVATIONS / ROOM 1-2-31, AND 1-2-32

SCALE: 1/4"=1'-0"

AEL050-2B

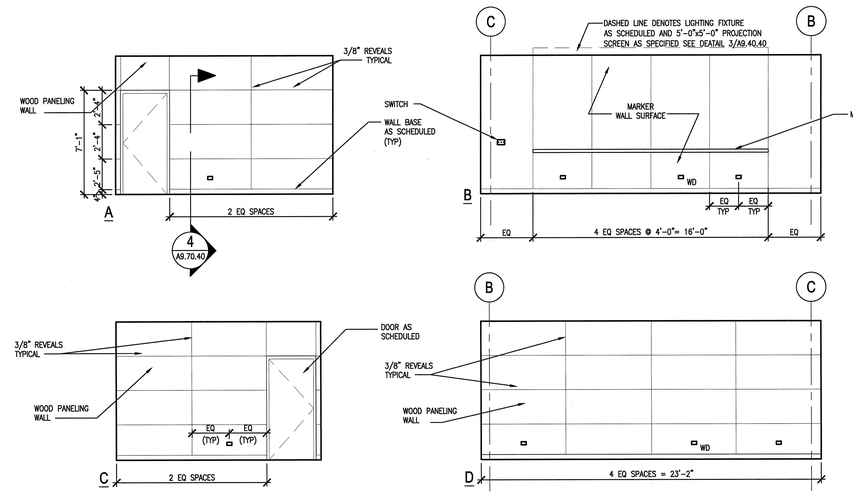


6 A5.10.41 CONFERENCE ROOM ELEVATIONS / ROOM 5-1-4

SCALE: 1/4"=1'-0"

AEL050-2B

SHEET NOTES:

1. SEE SHEET A5.20.45 FOR TYPICAL ELECTRICAL, COMMUNICATIONS AND DEVICES MOUNTING HEIGHTS.
2. WOOD BLOCKING AND METAL PLATE BACKING IS REQUIRED IN STEEL STUD AND GYPSUM WALLS FOR ALL ITEMS THAT ARE ATTACHED TO THE WALL.
3. ALL DOORS AND ADJACENT SIDE LITES WHOSE NEAREST VERTICAL EDGE IS WITHIN 4'-0" FROM A DOOR IN A CLOSED POSITION, SHALL BE GLAZED WITH TEMPERED GLASS TO THE FULL HEIGHT OF THE DOOR.
4. ▥ DENOTES 1/4" CLEAR, FULLY TEMPERED SAFETY GLASS.
5. REFER TO MECHANICAL AND ELECTRICAL DRAWINGS FOR THERMOSTAT, RECEPTACLE OUTLETS, DATA/PHONE OUTLETS, ETC.

4' 2' 0 4' 8'

SCALE: 1/4" = 1'-0"

108031400-A8E-8600-A166

Knight Jacobs
Knight/Jacobs Joint Venture
701 Scarboro Road, MS 8253
Oak Ridge, TN 37830
865-241-9433
fax 865-241-3400

KNIGHT
Knight Advanced Technology
543 West Randolph Street
Chicago, IL 60661

UT-BATTELLE
Oak Ridge National Laboratory
managed for the DEPARTMENT OF ENERGY under
U.S. GOVERNMENT contract DE-AC05-00OR22725
UT-BATTELLE, LLC. • Oak Ridge, Tennessee

PROJECT NAME:
SPALLATION NEUTRON SOURCE

CENTRAL LAB AND OFFICE BUILDING
CONFERENCE ROOMS & LIBRARY
ELEVATIONS

| 1 | 48 | 49 | 50 | PLANT | BLDG | FL | SH. | OF | TYPE | CLASS |
|---|---|---|---|---|---|---|---|---|---|---|
| 3 | A | X | X | 8 | 8600 | | 1 | 1 | S | U |
| 51 | | 52 | | 53 | WBS | | | | | REV |
| NC | | NA | | | 1.8.3.14 | | A5.10.41 | | | 0 |

| | | | |
|---|---|---|---|
| DSN | H. BAUMAN | 5/15/01 | |
| DRW | I-W WANG | 5/15/01 | |
| CHK | E. DENSON | 5/15/01 | |
| DEPT | | | |
| PE | R.L. Barnes | 5/15/01 | |
| PJ | | 5/15/01 | |
| REQ | | | |
| UTB | | 5/15/01 | |

RPE: ROBERT L. BARNES, REGISTERED ARCHITECT, STATE OF TENNESSEE, 5/15/01

REV. 0 DATE 5/15/01

DRAWING APPROVALS

| REV | CHANGE TYPE | CHANGE CONTROL SYSTEM | CHANGE REQUEST NUMBER | DESCRIPTION | DSN | CHK | DEPT | DATE | PE | DATE | PJ | DATE | REQ | DATE | UTB | DATE | RPE | RPE NO | DATE | SC | AW | WRS | RL | WRS | BWJ | -- | WRS | -- | WAS |
|---|---|---|---|---|---|---|---|---|---|---|---|---|---|---|---|---|---|---|---|---|---|---|---|---|---|---|---|---|---|
| 0 | | | | CERTIFIED FOR CONSTUCTION – MAY 15, 2001 | CF | ED | | | | | | | | | | | RLB | 102104 | 5/15/01 | | | | | | | | | | |
| | | | | | | | | | | | | | | | | | | | | ST | CV | EC | EE | EM | IE | M | PD | SE | AR |

REVISION OR ISSUE PURPOSE — REVISION APPROVALS — SQUAD CHECK

NO REPRESENTATION OR WARRANTY, EXPRESSED OR IMPLIED, IS MADE AS TO THE ACCURACY, COMPLETENESS OR USEFULNESS OF THE INFORMATION OR STATEMENTS CONTAINED IN THESE DRAWINGS, OR THAT THE USE OR DISCLOSURE OF ANY INFORMATION, APPARATUS, METHOD, OR PROCESS DISCLOSED IN THESE DRAWINGS MAY NOT INFRINGE PRIVATE RIGHTS OF OTHERS. NO LIABILITY IS ASSUMED WITH RESPECT TO THE USE OF, OR FOR DAMAGES RESULTING FROM THE USE OF ANY INFORMATION, APPARATUS, METHOD, OR PROCESS DISCLOSED IN THESE DRAWINGS. DRAWINGS MADE AVAILABLE FOR INFORMATION TO BIDDERS ARE NOT TO BE USED FOR OTHER PURPOSES AND ARE TO BE RETURNED UPON REQUEST OF THE FORWARDING CONTRACTOR.

NUMBER OF SECTION OR DETAIL — DRAWING ON WHICH SECTION OR DETAIL IS SHOWN OR TAKEN

SECTION AND DETAIL KEY

THIS DOCUMENT CONTROLLED BY

CHANGE CONTROL SYSTEM 4

ENGINEERING PROCEDURE SNS-ENG-0001

Date: 05/09/2001 Time: 10:38:39
Username: WANGIW
C:\SNS_PROJECTS\0001\R8_OAD\R_OAD_2B\AEL_FLOYLAD-10-41.DWG