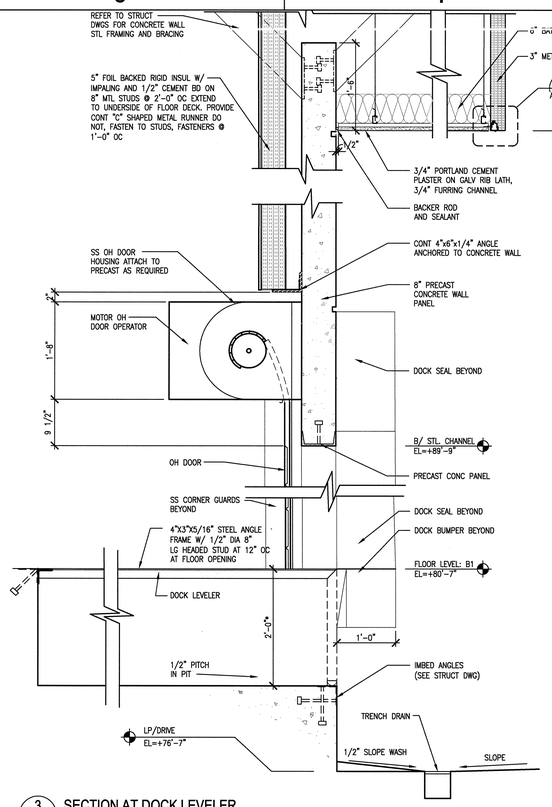

3 A4.10.42 SECTION AT DOCK LEVELER
SCALE: 1"=1'-0"
ADT111002

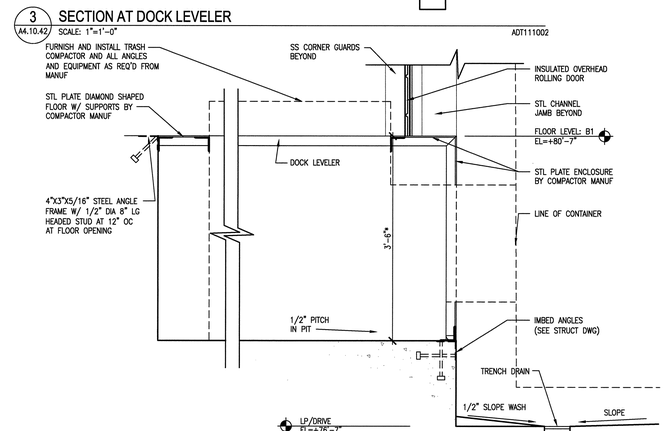

NOTE:
* DIMENSION FOR DOCK LEVELERS AND COMPACTOR PITS ARE FOR REFERENCE ONLY. CONTRACTOR SHALL COORDINATE LAYOUT, DIMENSIONS, PLACEMENT OF INSERTS AND BLOCKOUT WITH APPROVED SHOP DRAWINGS FROM DOCK LEVELER AND COMPACTOR MANUFACTURER, PRIOR TO FABRICATION OF STEEL AND PLACING OF CONCRETE.

4 A4.10.42 SECTION AT COMPACTOR PIT
SCALE: 1"=1'-0"
ADT111002

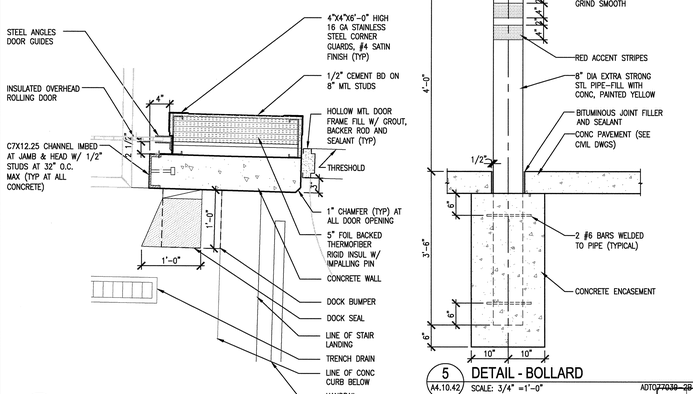

5 A4.10.42 DETAIL AT JAMBS
SCALE: 1"=1'-0"
ADT111001-2B

5 A4.10.42 DETAIL - BOLLARD
SCALE: 3/4" =1'-0"
ADT077039-2B

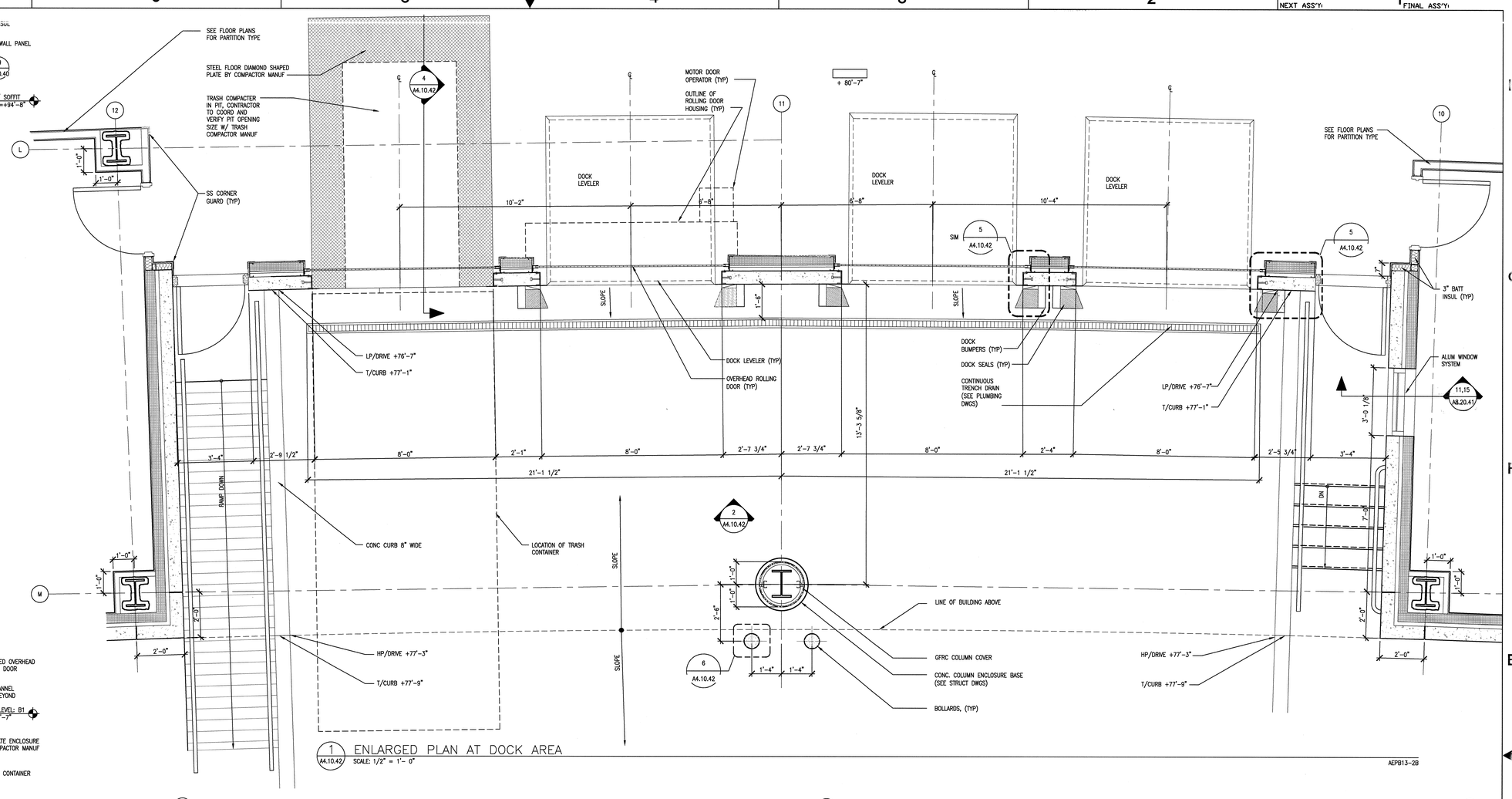

1 A4.10.42 ENLARGED PLAN AT DOCK AREA
SCALE: 1/2" = 1'- 0"
AEPB13-2B

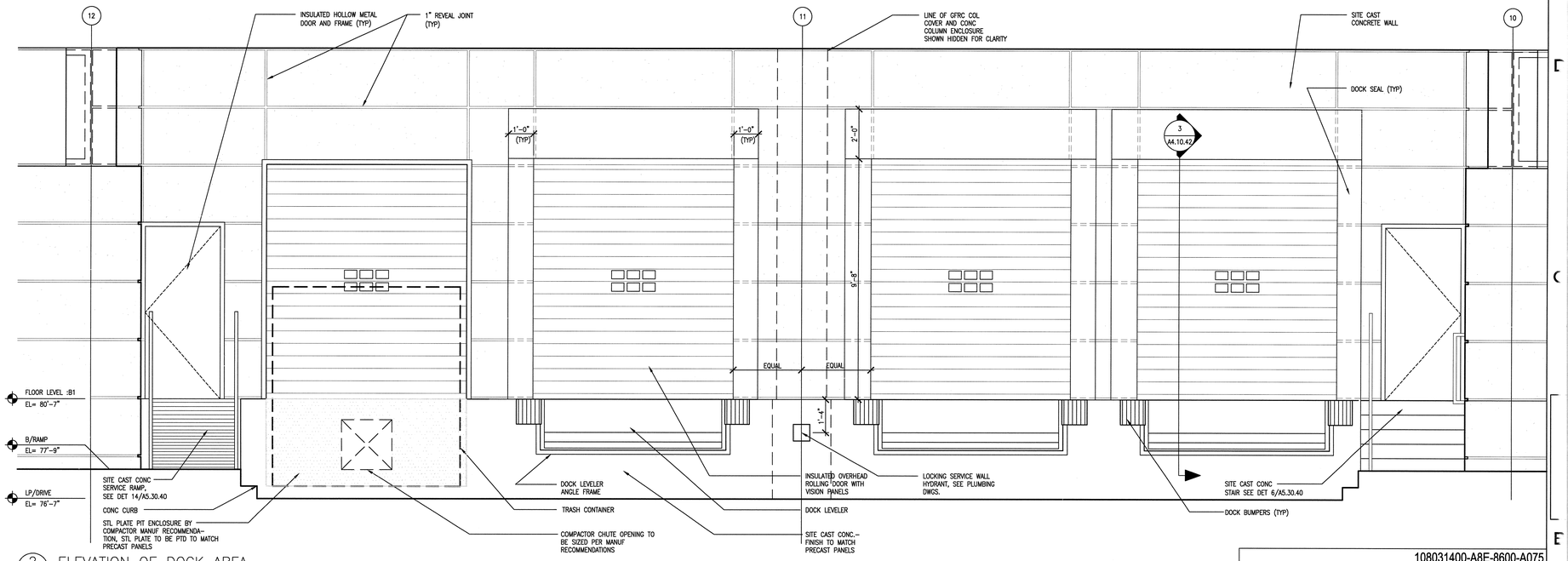

2 A4.10.42 ELEVATION OF DOCK AREA
SCALE: 1/2" = 1'- 0"
AEL044-2B

SCALE: 1/2" = 1'-0" SCALE: 3/4" = 1'-0" SCALE 1" = 1'-0"

NO REPRESENTATION OR WARRANTY, EXPRESSED OR IMPLIED, IS MADE AS TO THE ACCURACY, COMPLETENESS OR USEFULNESS OF THE INFORMATION OR STATEMENTS CONTAINED IN THESE DRAWINGS, OR THAT THE USE OR DISCLOSURE OF ANY INFORMATION, APPARATUS, METHOD, OR PROCESS DISCLOSED IN THESE DRAWINGS MAY NOT INFRINGE PRIVATE RIGHTS OF OTHERS. NO LIABILITY IS ASSUMED WITH RESPECT TO THE USE OF, OR FOR DAMAGES RESULTING FROM THE USE OF ANY INFORMATION, APPARATUS, METHOD, OR PROCESS DISCLOSED IN THESE DRAWINGS. DRAWINGS MADE AVAILABLE FOR INFORMATION TO BIDDER ARE NOT TO BE USED FOR OTHER PURPOSES AND ARE TO BE RETURNED UPON REQUEST OF THE FORWARDING CONTRACTOR.

NUMBER OF SECTION OR DETAIL — DRAWING ON WHICH SECTION OR DETAIL IS SHOWN OR TAKEN

SECTION AND DETAIL KEY

THIS DOCUMENT CONTROLLED BY
CHANGE CONTROL SYSTEM 4
ENGINEERING PROCEDURE SNS-ENG-0001

REV	CHANGE TYPE	CHANGE CONTROL SYSTEM	CHANGE REQUEST NUMBER	DESCRIPTION	DSN	CHK	DEPT	DATE	PE	DATE	PJ	DATE	REQ	DATE	UTB	DATE	RPE	RPE NO	DATE
1				CERTIFIED FOR CONSTRUCTION – 12/20/01	CF	ED											RLB	102104	12/20/01
0	–	4	–	CERTIFIED FOR CONSTRUCTION – MAY 15, 2001	CF	ED			CLG	9/6/01	JS	8/21/01			JRL	9/25/01	RLB	102104	5/15/01

REVISION OR ISSUE PURPOSE — REVISION APPROVALS

ST	CV	EC	EE	EM	IE	M	PD	SE	AR
RW	AW	BWJ	PD	BWJ	BWJ	--	BWJ	--	ED
SC	AW	WRS	RL	WRS	BWJ	--	WRS	--	WAS

SQUAD CHECK

RPE: ROBERT L. BARNES, REGISTERED ENGINEER, NO. 102104, STATE OF TENNESSEE — 12/12/01
REV. DATE

DSN	H. BAUMAN	5/15/01
DRW	F. ESPINOZA	5/15/01
CHK	E. DENSON	5/15/01
DEPT		
PE	C.L. GARREN	9/6/01
PJ	J. STELLERN	8/21/01
REQ		
UTB	J.R. LAWSON	9/25/01

DRAWING APPROVALS

108031400-A8E-8600-A075

Knight Jacobs
KnightJacobs Joint Venture
701 Scarboro Road, MS 8253
Oak Ridge, TN 37830
865-241-9433
fax 865-241-3400
KNIGHT
Knight Advanced Technology
540 West Randolph Street
Chicago, IL 60661

UT-BATTELLE
Oak Ridge National Laboratory
managed for the DEPARTMENT OF ENERGY under U.S. GOVERNMENT contract DE-AC05-000R22725
UT-BATTELLE, LLC, • Oak Ridge, Tennessee

PROJECT NAME:
SPALLATION NEUTRON SOURCE
CENTRAL LAB AND OFFICE BUILDING
ENLARGED FLOOR PLAN, ELEVATION
DOCK AREA AND DETAILS

1	48	49	50	PLANT	BLDG	FL	SH.	OF	TYPE	CLASS
3	A	X	X	8	8600		1	1	P	U
51	52		53	WBS						REV
NC	NA			1.8.3.14						1

A4.10.42

AutoCAD
Date: 12/19/2001 Time: 17:25:25
Username: BAMAUB
CN=C:\RDL\PROJECTS\7600\700_CAD\01\A04_2B\740_PLOT\A4-10-42.DWG