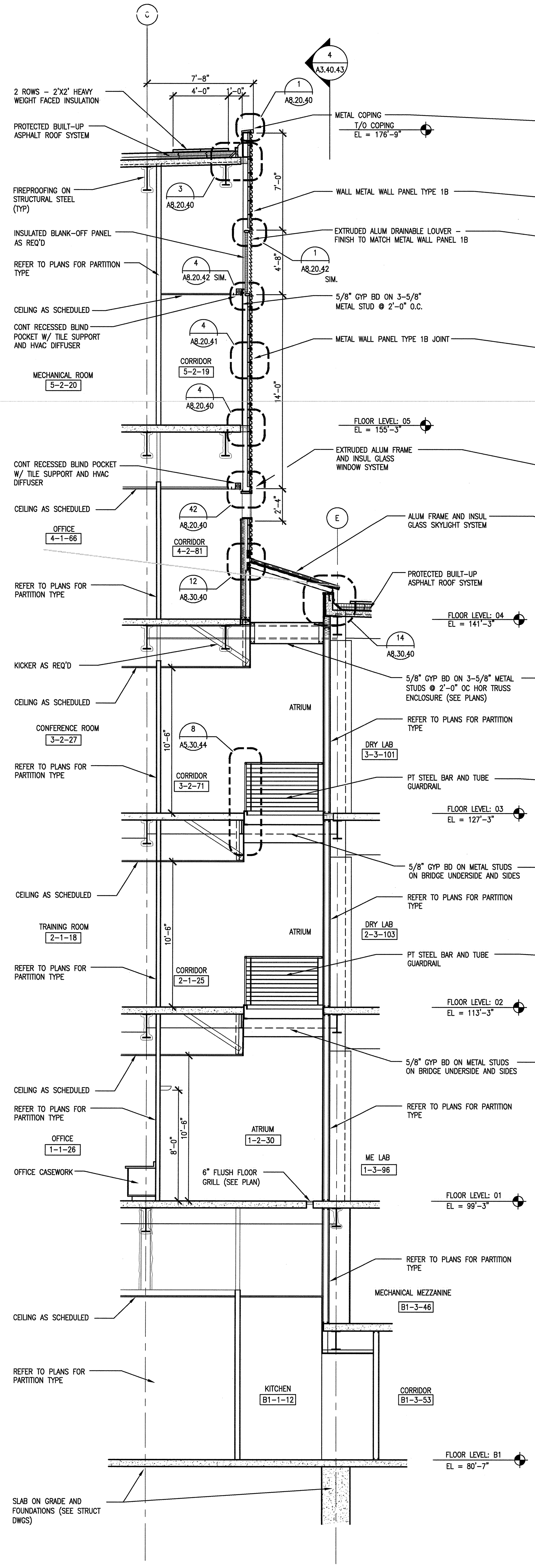

5 (A3.40.43) **WALL SECTION**
SCALE: 1/4" = 1'-0" — AWS015-2B

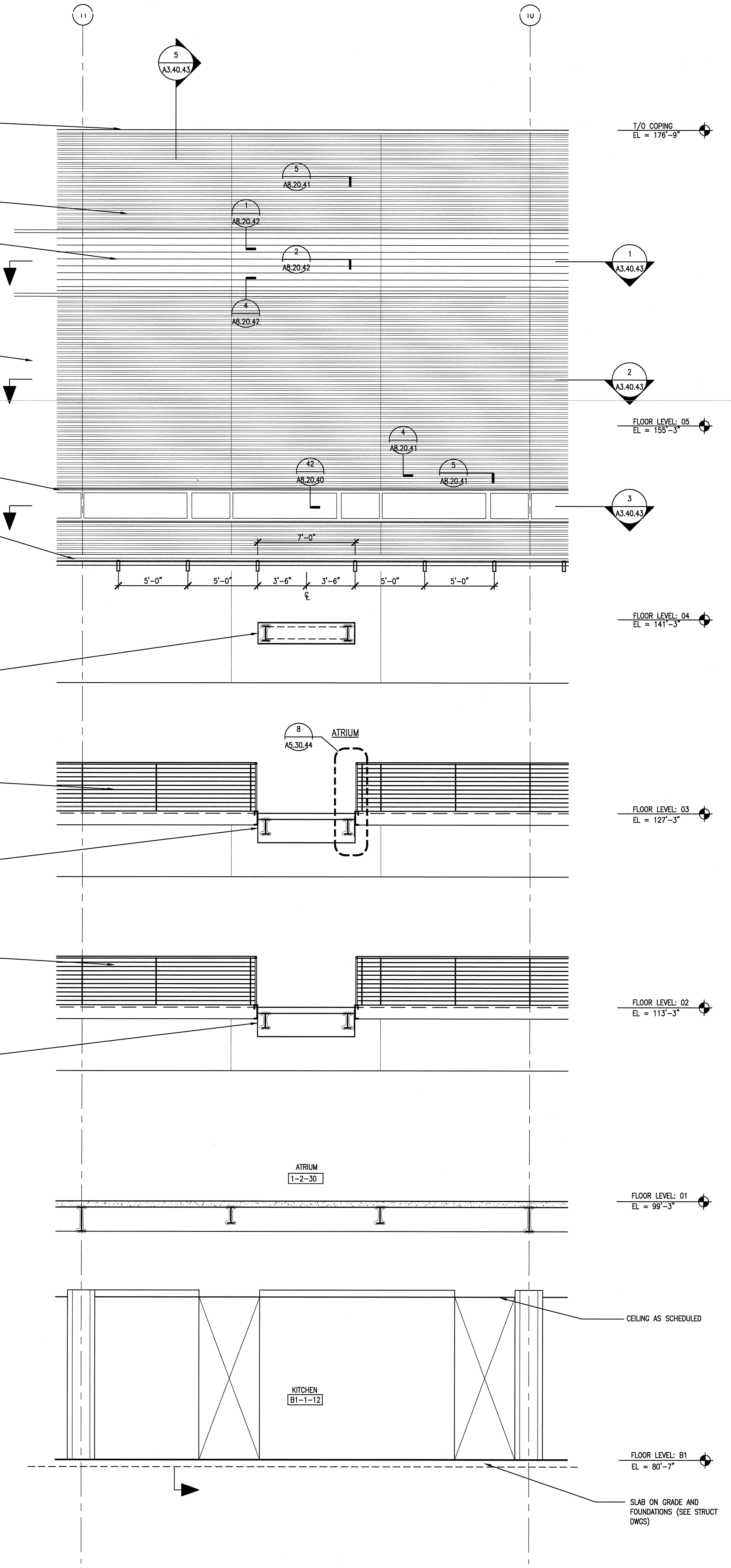

4 (A3.40.43) **PARTIAL EAST ELEVATION**
SCALE: 1/4" = 1'-0" — AEL014-2B

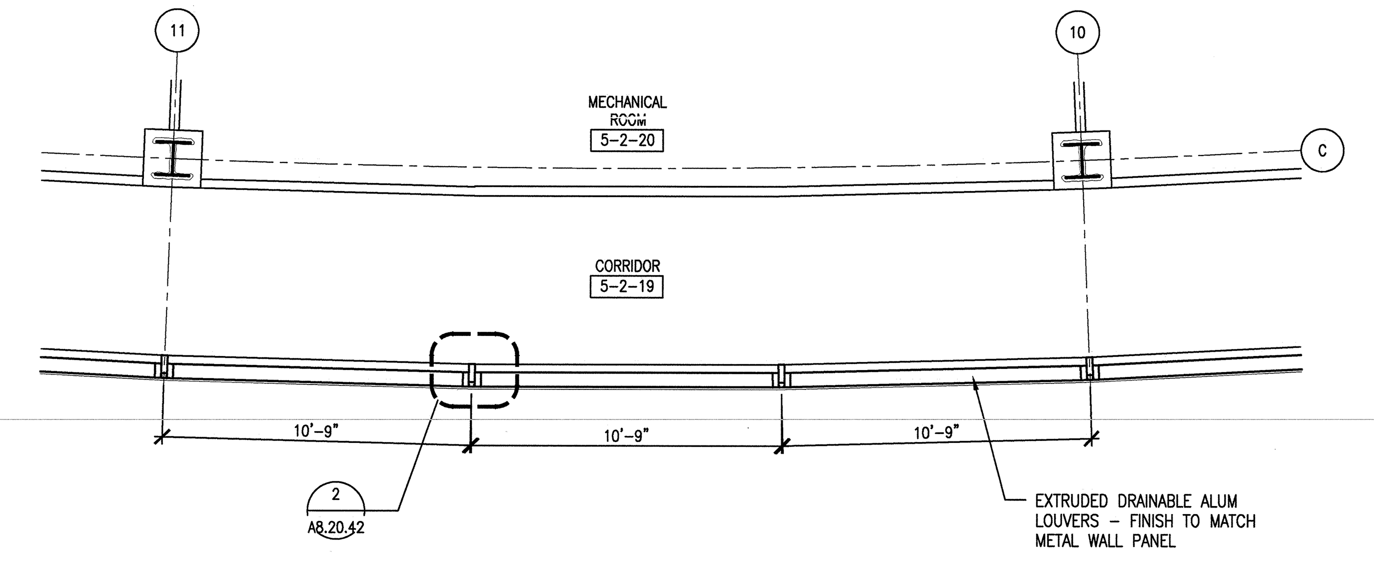

1 (A3.40.43) **PARTIAL PLAN - LEVEL 05 @ LOUVERS**
SCALE: 1/4"=1'-0" — ADT074016-2B

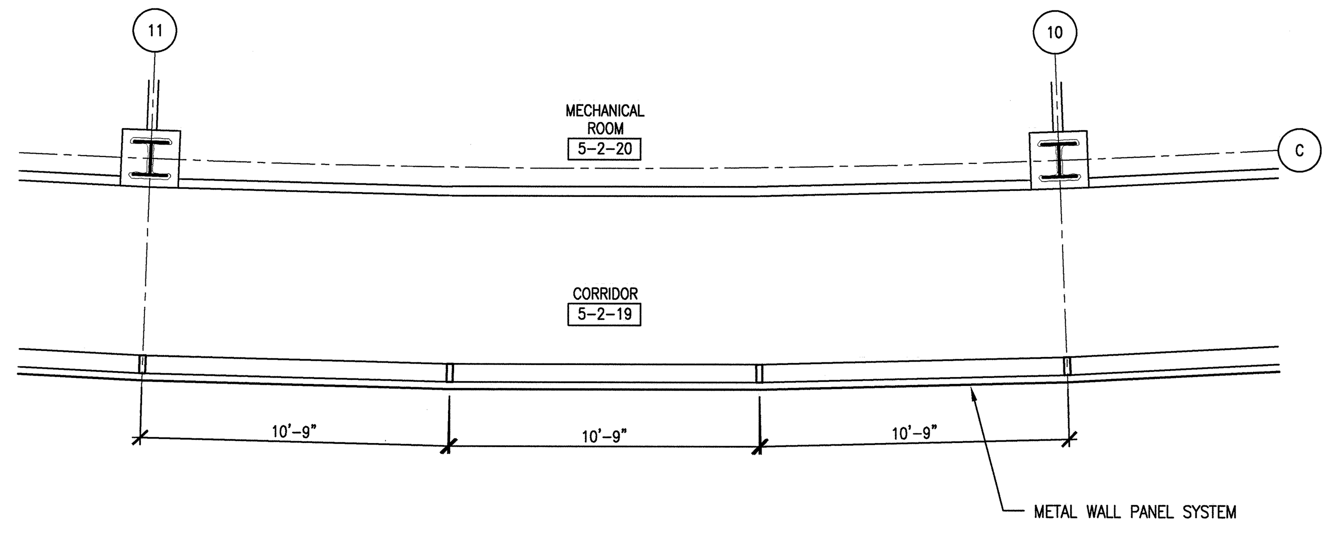

2 (A3.40.43) **PARTIAL PLAN - LEVEL 05**
SCALE: 1/4"=1'-0" — ADT074016-2B

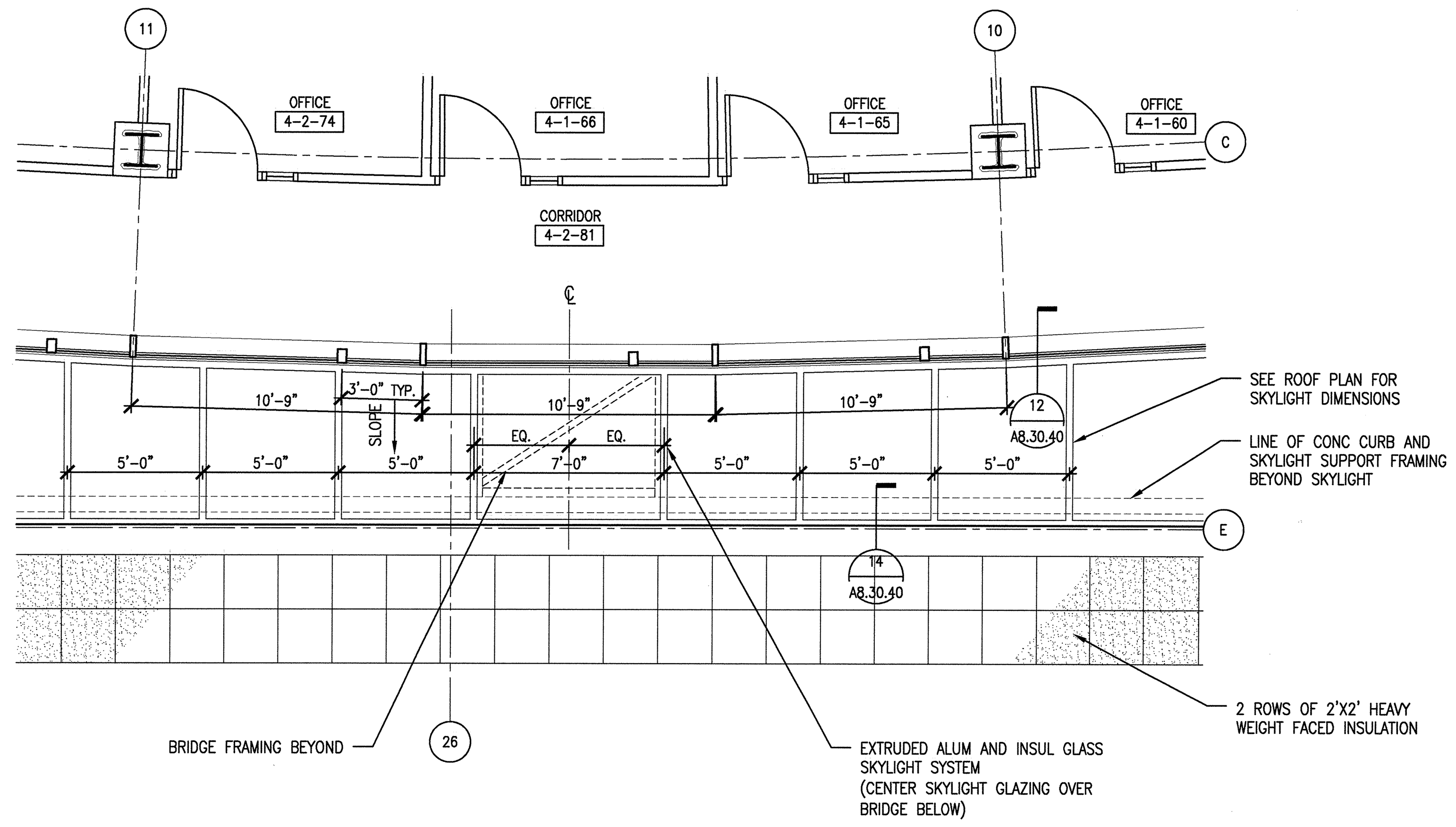

3 (A3.40.43) **PARTIAL PLAN - LEVEL 04**
SCALE: 1/4"=1'-0" — ADT074016-2B

4' 2' 0 4' 8'
SCALE: 1/4" = 1'-0"

108031400-A8E-8600-A163

Knight/Jacobs — Knight/Jacobs Joint Venture, 701 Scarboro Road, MS 8253, Oak Ridge, TN 37830, 865-241-9433, fax 865-241-3400

KNIGHT — Knight Advanced Technology — 549 West Randolph Street, Chicago, IL 60661

UT-BATTELLE — Oak Ridge National Laboratory, managed for the DEPARTMENT OF ENERGY under U.S. GOVERNMENT contract DE-AC05-00OR22725 — UT-BATTELLE, LLC, © Oak Ridge, Tennessee

PROJECT NAME:
SPALLATION NEUTRON SOURCE

CENTRAL LAB AND OFFICE BUILDING
WALL SECTIONS, PARTIAL ELEVATION, PARTIAL PLANS

1	48	49	50	PLANT	BLDG	FL	SH.	OF	TYPE	CLASS
3	A	X	X	8	8600		1	1	S	U
51		52		53	WBS					REV
NC		NA			1.8.3.14		A3.40.43			1

RPE			
	DSN	H. BAUMAN	5/15/01
	DRW	R. WEINMANN	5/15/01
	CHK	E. DENSON	5/15/01
	DEPT		
	PE	C.L. GARREN	9/6/01
	PJ	J. STELLERN	8/21/01
	REQ		
REV. DATE	UTB	J.R. LAWSON	9/25/01

ROBERT L. BARNES — REGISTERED ARCHITECT — NO. 102104 — STATE OF TENNESSEE — 12/12/01

DRAWING APPROVALS

REV	CHANGE TYPE	CHANGE CONTROL SYSTEM	CHANGE REQUEST NUMBER	DESCRIPTION	DSN	CHK	DEPT	DATE	PE	DATE	PJ	DATE	REQ	DATE	UTB	DATE	RPE	RPE NO	DATE	ST	CV	EC	EE	EM	IE	M	PD	SE	AR
1				CERTIFIED FOR CONSTRUCTION – 12/20/01	CF	ED			6/29	12/01		12/6/01				12/26/01	RLB	102104	12/20/01	RW	AW	BWJ	PD	BWJ	BWJ	--	BWJ	--	ED
0	–	4	–	CERTIFIED FOR CONSTRUCTION – MAY 15, 2001	CF	ED			CLG	9/6/01	JS	8/21/01			JRL	9/25/01	RLB	102104	5/15/01	SC	AW	WRS	RL	WRS	BWJ	--	WRS	--	WAS

REVISION OR ISSUE PURPOSE — REVISION APPROVALS — SQUAD CHECK

NO REPRESENTATION OR WARRANTY, EXPRESSED OR IMPLIED, IS MADE AS TO THE ACCURACY, COMPLETENESS OR USEFULNESS OF THE INFORMATION OR STATEMENTS CONTAINED IN THESE DRAWINGS, OR THAT THE USE OR DISCLOSURE OF ANY INFORMATION, APPARATUS, METHOD, OR PROCESS DISCLOSED IN THESE DRAWINGS MAY NOT INFRINGE PRIVATE RIGHTS OF OTHERS. NO LIABILITY IS ASSUMED WITH RESPECT TO THE USE OF, OR FOR DAMAGES RESULTING FROM THE USE OF ANY INFORMATION, APPARATUS, METHOD, OR PROCESS DISCLOSED IN THESE DRAWINGS. DRAWINGS MADE AVAILABLE FOR INFORMATION TO BIDDER ARE NOT TO BE USED FOR OTHER PURPOSES AND ARE TO BE RETURNED UPON REQUEST OF THE FORWARDING CONTRACTOR.

NUMBER OF SECTION OR DETAIL
DRAWING ON WHICH SECTION OR DETAIL IS SHOWN OR TAKEN
SECTION AND DETAIL KEY

THIS DOCUMENT CONTROLLED BY
CHANGE CONTROL SYSTEM 4
ENGINEERING PROCEDURE SNS-ENG-G001

AutoCAD

Date: 12/18/2001 Time: 11:52:57
Username: WANGW
CHI-F_VOL2:PROJECTS\7000\700_CADD\TASK_2B\740_PLOT\A3-40-43.DWG