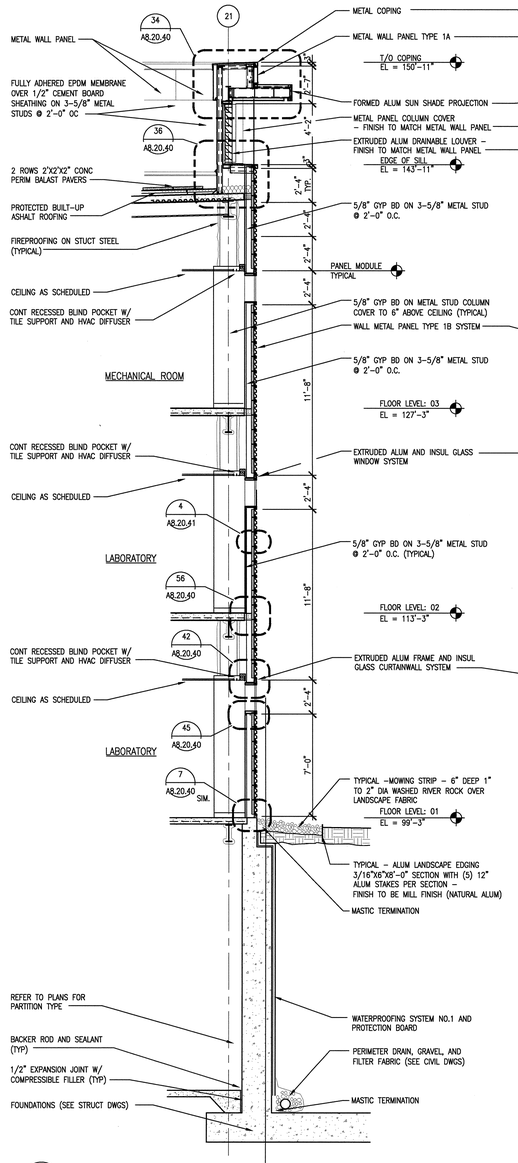

5 A3.40.42 WALL SECTION
SCALE: 1/4" = 1'-0"
AWS014-2B

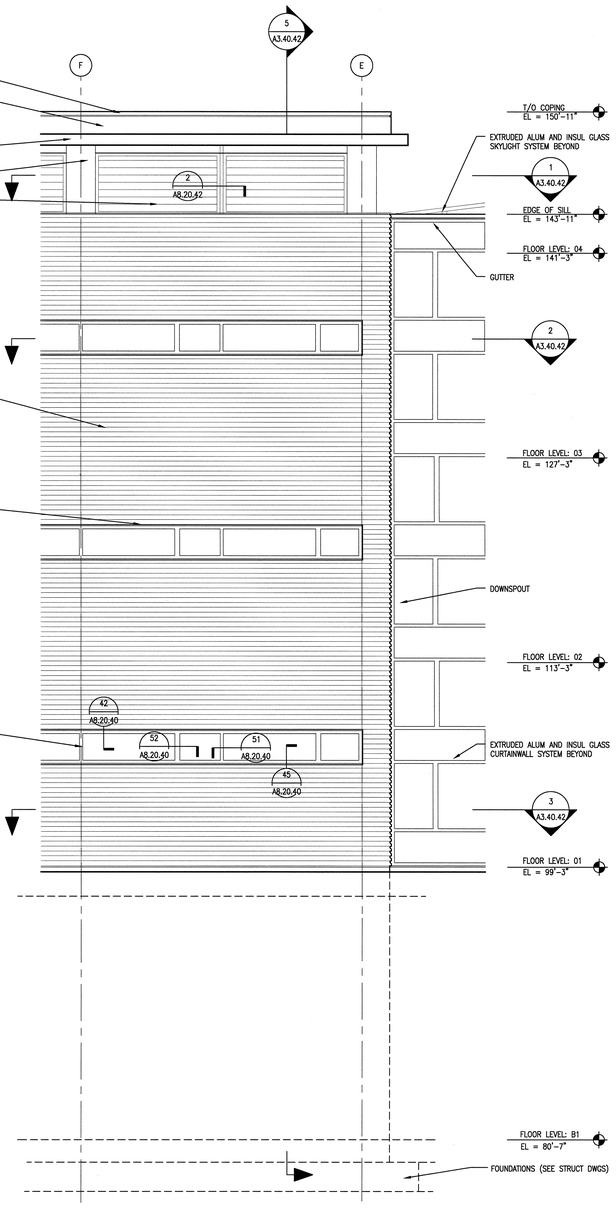

4 A3.40.42 PARTIAL WEST ELEVATION
SCALE: 1/4" = 1'-0"
AEL012-2B

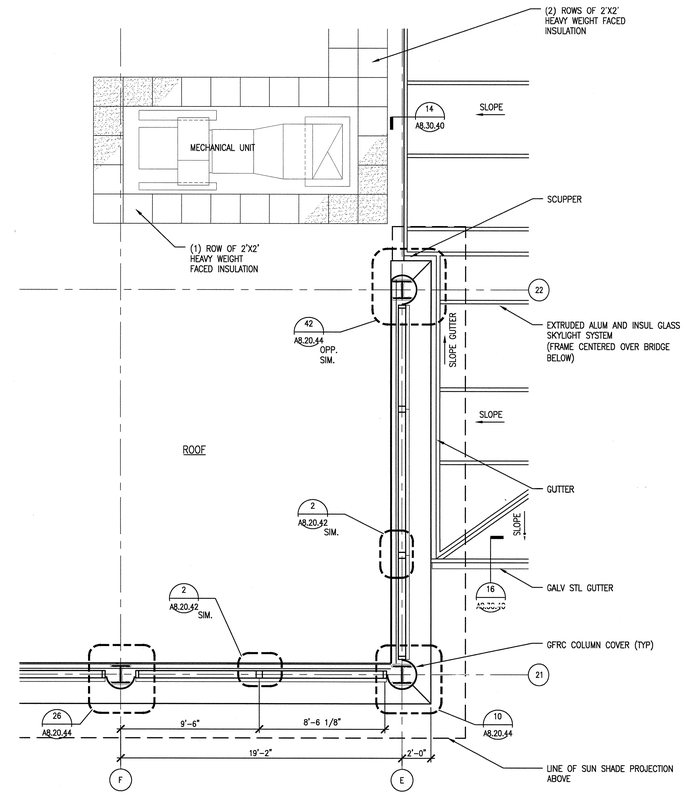

1 A3.40.42 PARTIAL PLAN - LEVEL 04
SCALE: 1/4"=1'-0"
ADT074015-2B

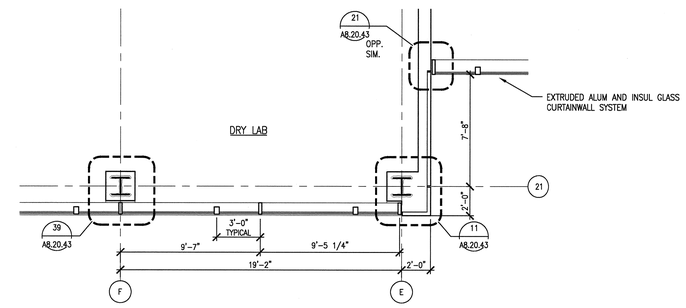

2 A3.40.42 PARTIAL PLAN - LEVEL 03
SCALE: 1/4"=1'-0"
ADT074015-2B

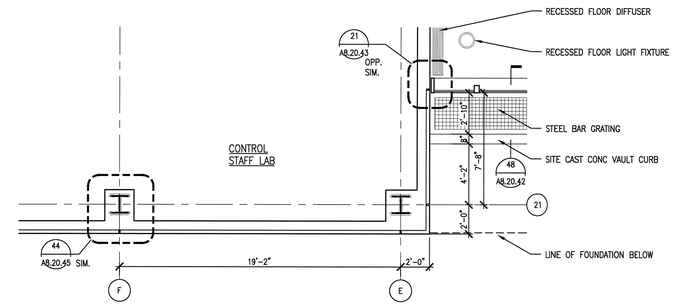

3 A3.40.42 PARTIAL PLAN - LEVEL 01
SCALE: 1/4"=1'-0"
ADT074015-2B

4' 2' 0 4' 8'
SCALE: 1/4" = 1'-0"

NO REPRESENTATION OR WARRANTY, EXPRESSED OR IMPLIED, IS MADE AS TO THE ACCURACY, COMPLETENESS OR USEFULNESS OF THE INFORMATION OR STATEMENTS CONTAINED IN THESE DRAWINGS, OR THAT THE USE OR DISCLOSURE OF ANY INFORMATION, APPARATUS, METHOD, OR PROCESS DISCLOSED IN THESE DRAWINGS MAY NOT INFRINGE PRIVATE RIGHTS OF OTHERS. NO LIABILITY IS ASSUMED WITH RESPECT TO THE USE OF, OR FOR DAMAGES RESULTING FROM THE USE OF ANY INFORMATION, APPARATUS, METHOD, OR PROCESS DISCLOSED IN THESE DRAWINGS. DRAWINGS MADE AVAILABLE FOR INFORMATION TO BIDDER ARE NOT TO BE USED FOR OTHER PURPOSES AND ARE TO BE RETURNED UPON REQUEST OF THE FORWARDING CONTRACTOR.

NUMBER OF SECTION OR DETAIL
DRAWING ON WHICH SECTION OR DETAIL IS SHOWN OR TAKEN
SECTION AND DETAIL KEY

THIS DOCUMENT CONTROLLED BY
CHANGE CONTROL SYSTEM 4
ENGINEERING PROCEDURE SNS-ENG-G001

REV	CHANGE TYPE	CHANGE CONTROL SYSTEM	CHANGE REQUEST NUMBER	DESCRIPTION	DSN	CHK	DEPT
1				CERTIFIED FOR CONSTRUCTION - 12/20/01	CF	ED	
0	-	4	-	CERTIFIED FOR CONSTRUCTION - MAY 15, 2001	CF	ED	

REVISION OR ISSUE PURPOSE

DATE	PE	DATE	PJ	DATE	REQ	DATE	UTB	DATE	RPE	RPE NO	DATE
		12/20/01		12/20/01				12/26/01	RLB	102104	12/20/01
	CLG	9/6/01	JS	8/21/01			JRL	9/25/01	RLB	102104	5/15/01

REVISION APPROVALS

RW	AW	BWJ	PD	BWJ	BWJ	--	BWJ	--	ED
SC	AW	WRS	RL	WRS	BWJ	--	WRS	--	WAS
ST	CV	EC	EE	EM	IE	M	PD	SE	AR

SQUAD CHECK

RPE
ROBERT L. BARNES REGISTERED ARCHITECT No. 10214 STATE OF TENNESSEE
12/12/01
REV. DATE

DSN	H. BAUMAN	5/15/01
DRW	R. WEINMANN	5/15/01
CHK	E. DENSON	5/15/01
DEPT		
PE	C.L. GARREN	9/6/01
PJ	J. STELLERN	8/21/01
REQ		
UTB	J.R. LAWSON	9/25/01

DRAWING APPROVALS

108031400-A8E-8600-A162

Knight Jacobs
Knight/Jacobs Joint Venture
701 Scarboro Road, MS 8253
Oak Ridge, TN 37830
865-241-9433
fax 865-241-3400

KNIGHT
Knight Advanced Technology
549 West Randolph Street
Chicago, IL 60661

UT-BATTELLE
Oak Ridge National Laboratory
managed for the DEPARTMENT OF ENERGY under U.S. GOVERNMENT contract DE-AC05-00OR22725
UT-BATTELLE, LLC, + Oak Ridge, Tennessee

PROJECT NAME:
SPALLATION NEUTRON SOURCE
CENTRAL LAB AND OFFICE BUILDING
WALL SECTIONS, PARTIAL ELEVATION, PARTIAL PLANS

1	48	49	50	PLANT	BLDG	FL	SH.	OF	TYPE	CLASS
3	A	X	X	8	8600		1	1	S	U

51	52	53	WBS	REV
NC	NA		1.8.3.14	1

A3.40.42

Date: 12/18/2001 Time: 11:53:15
Username: BWM2W
DW-F:\PJS\PROJECTS\7000\700_CADD\NEW_SB\140_PLOT\A3-40-42.DWG

AutoCAD