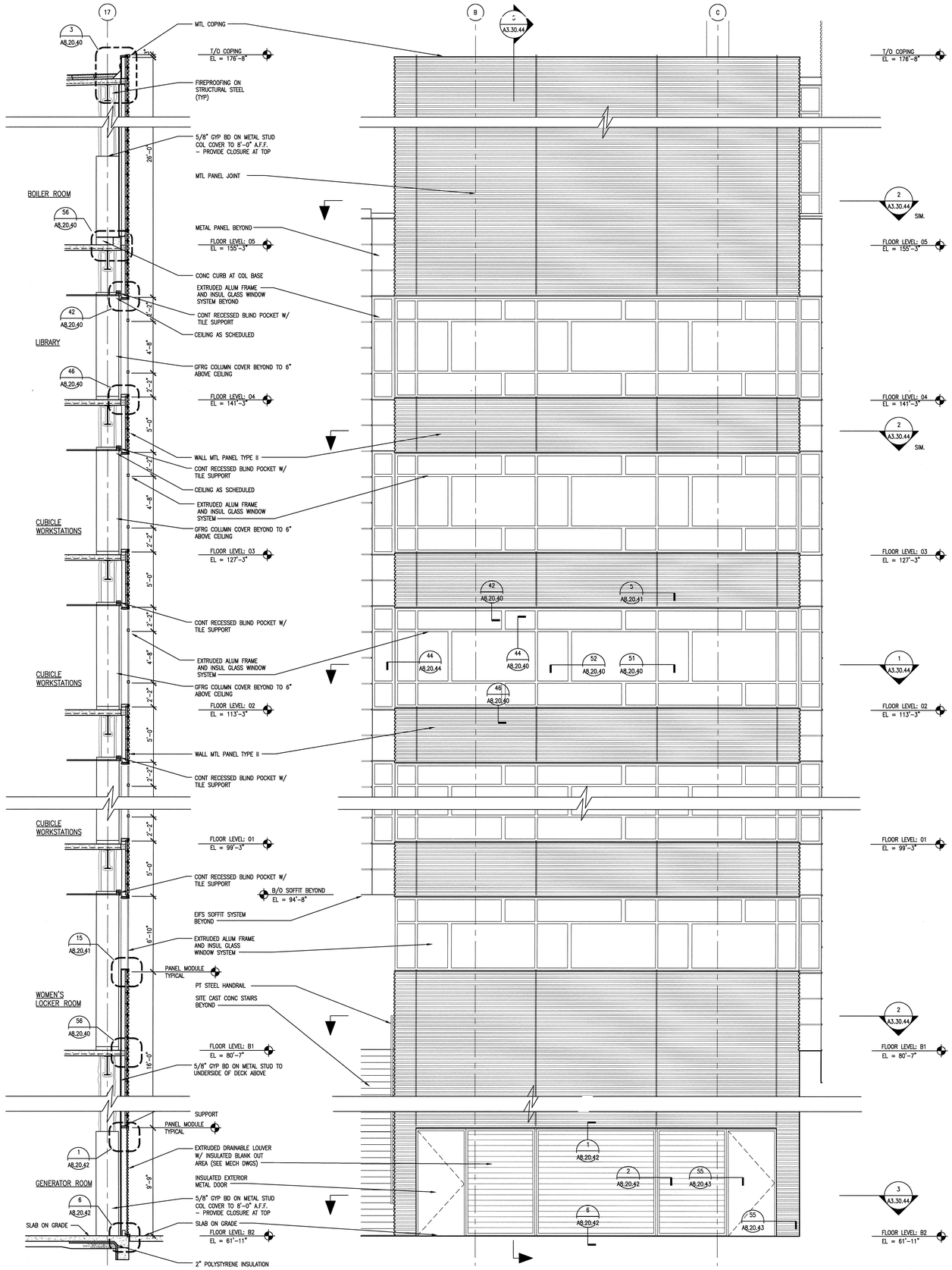

5 A3.30.44 WALL SECTION
SCALE: 1/4" = 1'-0"
AWS005-2B

4 A3.30.44 PARTIAL EAST ELEVATION
SCALE: 1/4" = 1'-0"
AEL011-2B

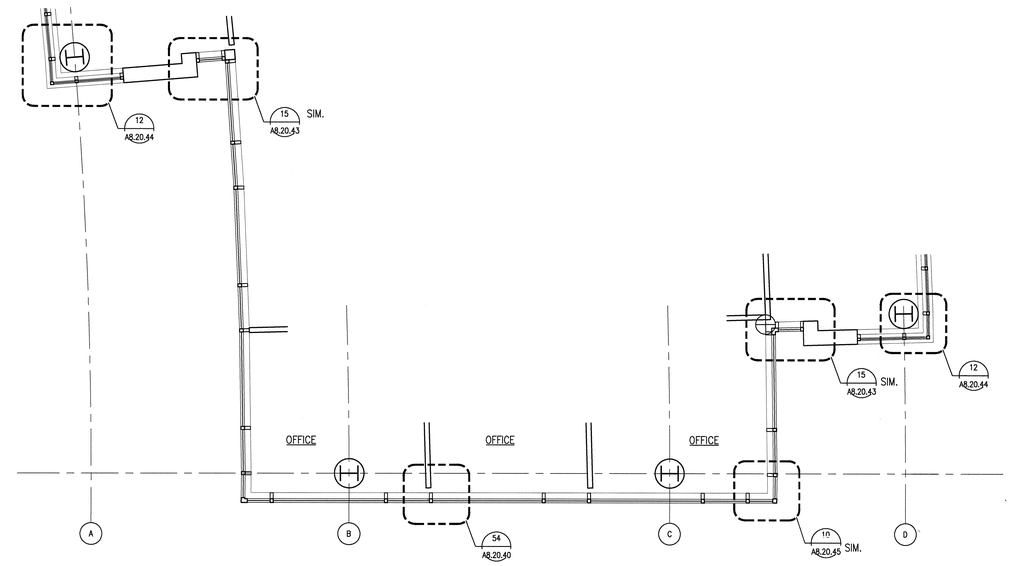

1 A3.30.44 PARTIAL PLAN - LEVEL 01, 02, 03, 04, 05
SCALE: 1/4"=1'-0"
ADT074019

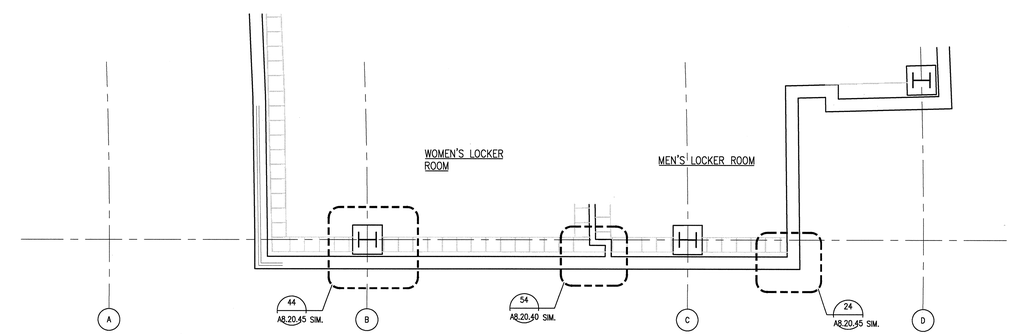

2 A3.30.44 PARTIAL PLAN - LEVEL B1
SCALE: 1/4"=1'-0"
ADT074018

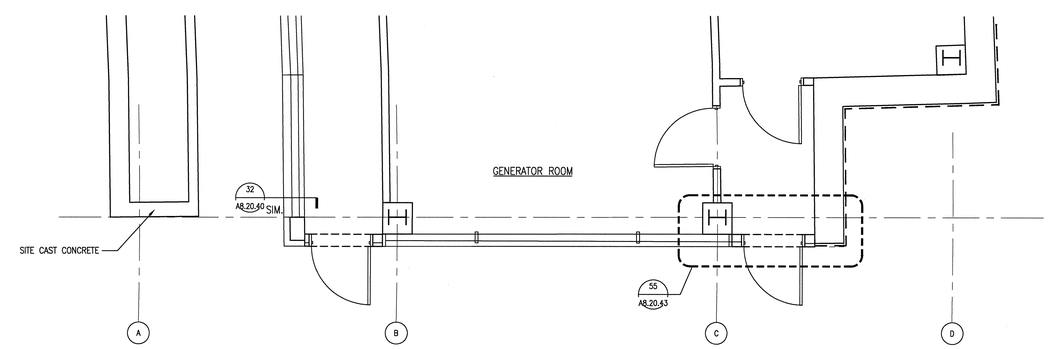

3 A3.30.44 PARTIAL PLAN - LEVEL B2
SCALE: 1/4"=1'-0"
ADT074007

4' 2' 0 4' 8'
SCALE: 1/4" = 1'-0"

NO REPRESENTATION OR WARRANTY, EXPRESSED OR IMPLIED, IS MADE AS TO THE ACCURACY, COMPLETENESS OR USEFULNESS OF THE INFORMATION OR STATEMENTS CONTAINED IN THESE DRAWINGS, OR THAT THE USE OR DISCLOSURE OF ANY INFORMATION, APPARATUS, METHOD, OR PROCESS DISCLOSED IN THESE DRAWINGS MAY NOT INFRINGE PRIVATE RIGHTS OF OTHERS. NO LIABILITY IS ASSUMED WITH RESPECT TO THE USE OF, OR FOR DAMAGES RESULTING FROM THE USE OF ANY INFORMATION, APPARATUS, METHOD, OR PROCESS DISCLOSED IN THESE DRAWINGS. DRAWINGS MADE AVAILABLE FOR INFORMATION TO BIDDER ARE NOT TO BE USED FOR OTHER PURPOSES AND ARE TO BE RETURNED UPON REQUEST OF THE FORWARDING CONTRACTOR.

NUMBER OF SECTION OR DETAIL
DRAWING ON WHICH SECTION OR DETAIL IS SHOWN OR TAKEN
SECTION AND DETAIL KEY

THIS DOCUMENT CONTROLLED BY
CHANGE CONTROL SYSTEM 4
ENGINEERING PROCEDURE SNS-ENG-0001

REV	CHANGE TYPE	CHANGE CONTROL SYSTEM	CHANGE REQUEST NUMBER	DESCRIPTION	DSN	CHK	DEPT
1				CERTIFIED FOR CONSTRUCTION – 12/20/01	CF	ED	
0	–	4	–	CERTIFIED FOR CONSTRUCTION – MAY 15, 2001	CF	ED	

REVISION OR ISSUE PURPOSE

DATE	PE	DATE	PJ	DATE	REQ	DATE	UTB	DATE	RPE	RPE NO	DATE
	CLG	9/6/01	JS	8/21/01			JRL	9/25/01	RLB	102104	5/15/01
									RLB	102104	12/20/01

REVISION APPROVALS

SC	AW	WRS	RL	WRS	BWJ	--	WRS	--	WAS
RW	AW	BWJ	PD	BWJ	BWJ	--	BWJ	--	ED
ST	CV	EC	EE	EM	IE	M	PD	SE	AR

SQUAD CHECK

RPE
ROBERT L. BARNES REGISTERED ARCHITECT TENNESSEE NO. 102104
12/20/01
REV. DATE

DSN	H. BAUMAN	5/15/01
DRW	R. WEINMANN	5/15/01
CHK	E. DENSON	5/15/01
DEPT		
PE	C.L. GARREN	9/6/01
PJ	J. STELLERN	8/21/01
REQ		
UTB	J.R. LAWSON	9/25/01

DRAWING APPROVALS

108031400-A8E-8600-A065

Knight Jacobs
KnightJacobs Joint Venture
701 Scarboro Road, MS 8253
Oak Ridge, TN 37830
865-241-9433
fax 865-241-3400

KNIGHT
Knight Advanced Technology
500 West Randolph Street
Chicago, IL 60661

UT-BATTELLE
Oak Ridge National Laboratory
managed for the DEPARTMENT OF ENERGY under
U.S. GOVERNMENT contract DE-AC05-000R22725
UT-BATTELLE, LLC. = Oak Ridge, Tennessee

PROJECT NAME:
SPALLATION NEUTRON SOURCE
CENTRAL LAB AND OFFICE BUILDING
WALL SECTIONS, PARTIAL ELEVATION, PARTIAL PLANS

1	48	49	50	PLANT	BLDG	FL	SH.	OF	TYPE	CLASS
3	A	X	X	8	8600		1	1	S	U
51		52		53	WBS					REV
NC		NA			1.8.3.14				A3.30.44	1

Date: 12/18/2001 Time: 11:08:13
User: JRLAWSON
DR=C:\ELLPROJECTS\7000\700_0001\000_001\A8_R15\A3-30-44.DWG