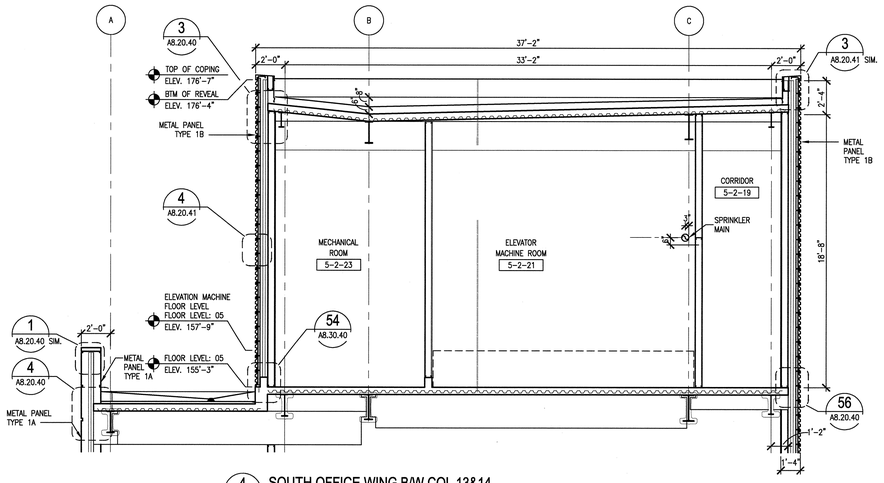

4 SOUTH OFFICE WING B/W COL 13&14
A2.05.62 SCALE: 1/4"=1'-0" ASC007-2B

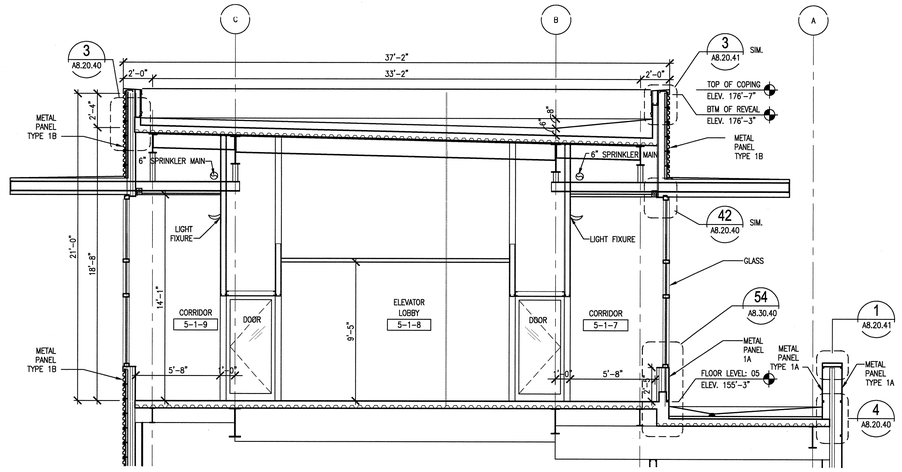

1 SOUTH OFFICE WING BETWEEN COL 7&8
A2.05.61 SCALE: 1/4"=1'-0" ASC004-2B

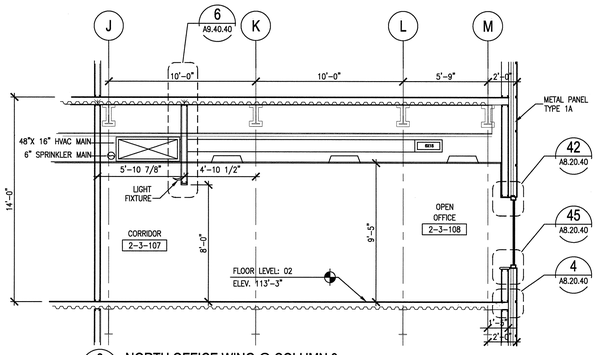

8 NORTH OFFICE WING @ COLUMN 9
A2.02.63 SCALE: 1/4"=1'-0" ASC002-2B

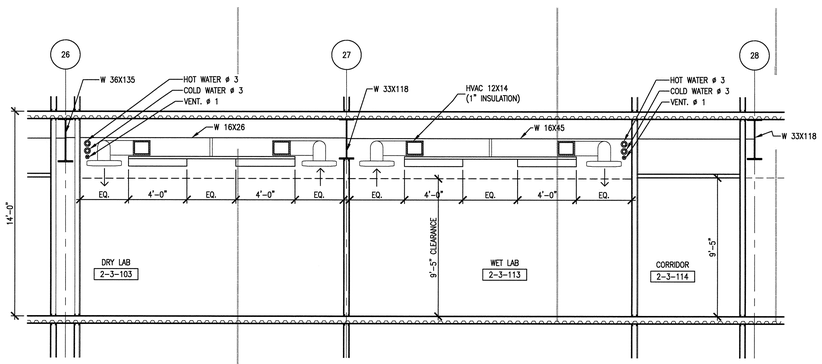

5 TYP WET LAB B/W COL F&G (LOOKING NORTH)
A2.02.63 SCALE: 1/4"=1'-0" ASC008-2B

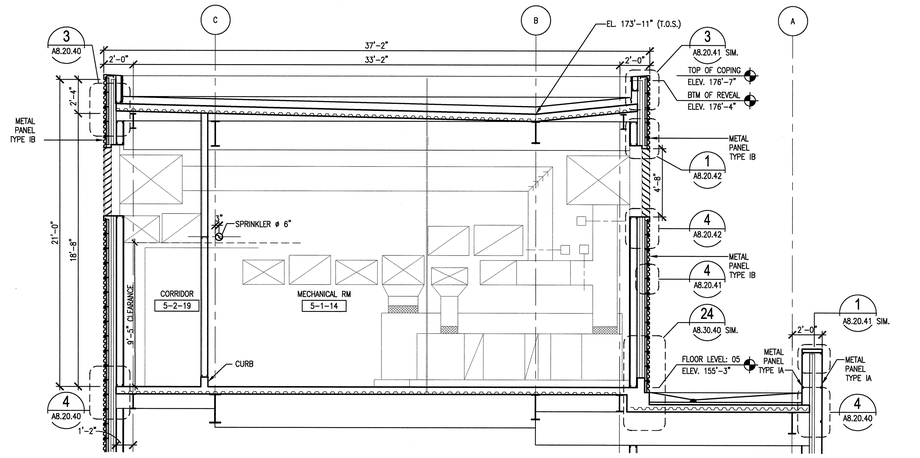

2 SOUTH OFFICE WING B/W COL 9&10
A2.05.61 SCALE: 1/4"=1'-0" ASC005-2B

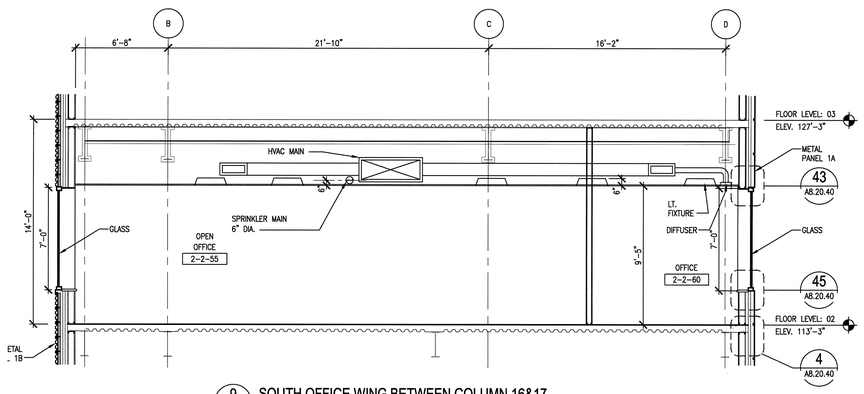

9 SOUTH OFFICE WING BETWEEN COLUMN 16&17
A2.02.62 SCALE: 1/4"=1'-0" ASC009-2B

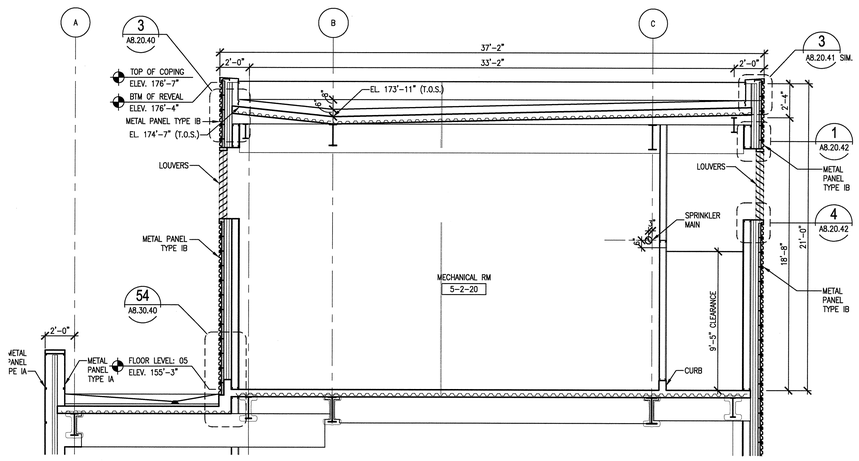

3 SOUTH OFFICE WING B/W COL 12&13
A2.05.62 SCALE: 1/4"=1'-0" ASC006-2B

SCALE: 1/4" = 1'-0"

108031400-A8E-8600-A055

Knight/Jacobs Joint Venture
701 Scarboro Road, MS 8253
Oak Ridge, TN 37830
865-241-9433
fax 865-241-3400

KNIGHT
Knight Advanced Technology
549 West Randolph Street
Chicago, IL 60661

UT-BATTELLE
Oak Ridge National Laboratory
managed for the DEPARTMENT OF ENERGY under
U.S. GOVERNMENT contract DE-AC05-00OR22725
UT-BATTELLE, LLC, • Oak Ridge, Tennessee

PROJECT NAME:
SPALLATION NEUTRON SOURCE
CENTRAL LAB AND OFFICE BUILDING
BUILDING SECTIONS

1	48	49	50	PLANT	BLDG	FL	SH.	OF	TYPE	CLASS
3	A	X	X	8	8600		1	1	S	U
51		52		53	WBS					REV
NC		NA			1.8.3.14		A3.20.42			1

REV	CHANGE TYPE	CHANGE CONTROL SYSTEM	CHANGE REQUEST NUMBER	DESCRIPTION	DSN	CHK	DEPT	DATE	PE	DATE	PJ	DATE	REQ	DATE	UTB	DATE	RPE	RPE NO	DATE	RW	AW	BWJ	PD	BWJ	BWJ	--	BWJ	--	ED
1				CERTIFIED FOR CONSTRUCTION – 12/20/01	CF	ED		12/20/01		12/21/01		12/21/01				12/26/01	RLB	102104	12/20/01	RW	AW	BWJ	PD	BWJ	BWJ	--	BWJ	--	ED
0	–	4	–	CERTIFIED FOR CONSTRUCTION – MAY 15, 2001	CF	ED			CLG	9/6/01	JS	8/21/01			JRL	9/25/01	RLB	102104	5/15/01	SC	AW	WRS	RL	WRS	BWJ	--	WRS	--	WAS
																				ST	CV	EC	EE	EM	IE	M	PD	SE	AR

REVISION OR ISSUE PURPOSE — REVISION APPROVALS — SQUAD CHECK

RPE		
DSN	H. BAUMAN	5/15/01
DRW	H. MAK	5/15/01
CHK	E. DENSON	5/15/01
DEPT		
PE	C.L. GARREN	9/6/01
PJ	J. STELLERN	8/21/01
REQ		
UTB	J.R. LAWSON	9/25/01

ROBERT L. BARNES REGISTERED ARCHITECT NO. 102104 STATE OF TENNESSEE
12/20/01

REV. DATE — DRAWING APPROVALS

NO REPRESENTATION OR WARRANTY, EXPRESSED OR IMPLIED, IS MADE AS TO THE ACCURACY, COMPLETENESS OR USEFULNESS OF THE INFORMATION OR STATEMENTS CONTAINED IN THESE DRAWINGS, OR THAT THE USE OR DISCLOSURE OF ANY INFORMATION, APPARATUS, METHOD, OR PROCESS DISCLOSED IN THESE DRAWINGS MAY NOT INFRINGE PRIVATE RIGHTS OF OTHERS. NO LIABILITY IS ASSUMED WITH RESPECT TO THE USE OF, OR FOR DAMAGES RESULTING FROM THE USE OF ANY INFORMATION, APPARATUS, METHOD, OR PROCESS DISCLOSED IN THESE DRAWINGS. DRAWINGS MADE AVAILABLE FOR INFORMATION TO BIDDER ARE NOT TO BE USED FOR OTHER PURPOSES AND ARE TO BE RETURNED UPON REQUEST OF THE FORWARDING CONTRACTOR.

NUMBER OF SECTION OR DETAIL
DRAWING ON WHICH SECTION OR DETAIL IS SHOWN OR TAKEN
SECTION AND DETAIL KEY

THIS DOCUMENT CONTROLLED BY
CHANGE CONTROL SYSTEM 4
ENGINEERING PROCEDURE SNS-ENG-0001

Date: 12/26/2001 Time: 12:25:08
Username: BWJOW
CH-C:\EJ2\PROJECTS\7000\700_CRAD\CRAD_BB\142_PLST\A3-20-42.DWG