Catalog Number	Type
LGF-1/32TRT-7RW-FFL-277	Z5

GOTHAM®

Compact Fluorescent Downlights

7" LGF

Round Lens

Wet Location
Horizontal Lamp
Twin-Tube or Double Twin-Tube

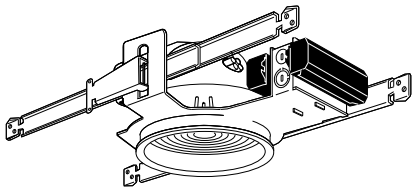

FEATURES

- Die-cast aluminum socket housing with heat-dissipating fins and vented top. Horizontally-mounted, two-pin, positive-latch, thermoplastic sockets in double-lamp configuration.
- Expandable, self-locking mounting bars provide horizontal and vertical adjustment.
- Spun aluminum housing. Specular upper reflector. Lower trim finished in white polyester powder.
- Regressed white splay or optional stepped black baffle. Available with tempered prismatic lens (T73), flat fresnel lens (FFL) or concave Holophane lens (CHL). Door is retained by two self-aligning, constant-tension support springs.
- Galvanized steel junction box with bottom-hinged access covers and spring latches. Three combination 1/2"-3/4" knockouts and one 1/2" knockout for straight-through conduit runs. Capacity: 8 (4 in, 4 out) No. 12 AWG conductors, rated for 75°C.
- Class P (thermally-protected) high power factor ballast(s) mounted to junction box.
- Die-formed galvanized steel mounting/plaster frame. Maximum 7/8" ceiling thickness.
- Fixtures are UL listed and CSA certified for thru-branch wiring, recessed mounting and wet locations.

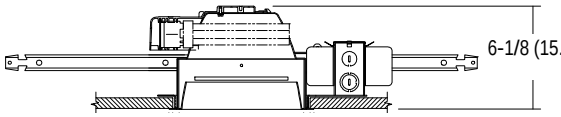

Aperture:	7-7/16 (18.9)
Ceiling opening:	8-1/8 (20.6)
Overlap trim:	8-5/8 (21.9)

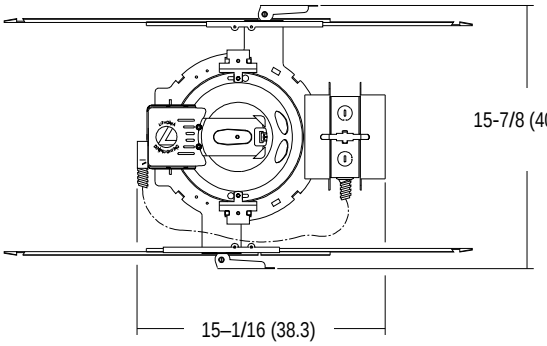

All dimensions are inches (centimeters).
Two ballasts shown for maximum dimension.
Actual configuration may vary.

ORDERING INFORMATION

Choose the boldface catalog nomenclature that best suits your needs and write it on the appropriate line.
Order accessories as separate catalog numbers (shipped separately).

Example: **LGF 2/13TT 7RW T73 120**

LGF

Series	Wattage/lamp	Door frame	Shielding	Voltage	Options
LGF	**2/13TT** Two 13W twin-tube **2/13DTT** Two 13W double twin-tube **2/18DTT** Two 18W double twin-tube **2/26DTT** Two 26W double twin-tube	**7RW** Regressed white splay **7SB** Stepped black baffle	**T73** Prismatic lens **CHL** Concave Holophane lens **FFL** Flat Fresnel lens	**120** **277** **347**	**SSC** Provides compatibility with Lithonia Reloc System 820. System 820 can be installed **less this option** with connectors provided by others. **GMF** Single slow-blow fuse. **RIF** Radio interference filter. **DMHL** Lutron Hi-lume* solid-state dimming ballast, 120V or 277V, 18W and 26W only. Requires Osram/Sylvania four-pin lamp. **DS** Dual switching. **GEB** Solid-state electronic ballast. Requires four-pin lamp. (26W, 18W, 13W DTT ONLY.) **ELR** Emergency battery pack. Remote test switch required. (Consult factory for dimensional changes.)

*Hi-lume is a registered trademark of Lutron Electronics.

7" LGF Round Lens, Gotham Series

Distribution curve	Distribution data	Output data	Coefficient of utilization	Single luminaire data 30" above floor

LGF 2/26DTT 7RW T73, (2) 26W PL-C 26W/27SH lamp, 1.1 s/mh, 1800 rated lumens per lamp, test no. 2196010503

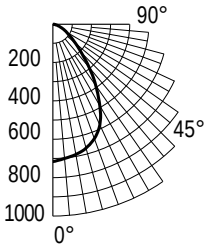

From 0°	cp.	Lumens
0°	715	
5°	702	67
15°	668	189
25°	579	265
35°	391	247
45°	212	168
55°	112	104
65°	60	62
75°	25	29
85°	6	8
90°	0	

Zone	Lumens	%lamp
0°-30°	520	14.5
0°-40°	766	21.3
0°-60°	1037	28.8
0°-90°	1134	31.5
90°-180°	0	0.0
0°-180°	1134	31.5*

* Efficiency

ρf	20%					
ρc	80%		70%		50%	
ρw	50%	30%	50%	30%	50%	30%
1	34	33	34	33	32	32
2	31	30	31	29	30	29
3	29	27	28	27	28	26
4	27	25	26	24	25	24
5	24	22	24	22	23	22
6	23	20	22	20	22	20
7	21	19	21	18	20	18
8	19	17	19	17	19	17
9	18	16	18	16	17	15
10	16	14	16	14	16	14

		50% beam angle 56.9°		10% beam angle 90.9°	
Mount height	Initial fc at beam center	Beam diameter	fc at beam edge	Beam diameter	fc at beam edge
8'	23.7	6.0'	11.8	11.2'	2.4
10'	12.7	8.1'	6.4	15.2'	1.3
12'	7.9	10.7'	4.0	19.3'	0.8
14'	5.4	12.4'	2.7	23.4'	0.5
16'	3.9	14.6'	2.0	27.4'	0.4

LGF 2/26DTT 7RW FFL, (2) 26W PL-C 26W/27SH lamp, 0.9 s/mh, 1800 rated lumens per lamp, test no. 2196010501

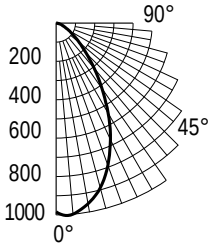

From 0°	cp.	Lumens
0°	983	
5°	999	95
15°	888	250
25°	669	308
35°	416	265
45°	221	175
55°	111	101
65°	51	54
75°	23	25
85°	3	5
90°	0	

Zone	Lumens	%lamp
0°-30°	651	18.1
0°-40°	915	25.4
0°-60°	1190	33.1
0°-90°	1273	35.4
90°-180°	0	0.0
0°-180°	1273	35.4*

* Efficiency

ρf	20%					
ρc	80%		70%		50%	
ρw	50%	30%	50%	30%	50%	30%
1	39	38	38	37	37	36
2	36	34	35	34	34	33
3	33	31	32	31	32	30
4	31	29	30	28	29	28
5	28	26	28	26	27	26
6	26	24	26	24	26	24
7	24	22	24	22	24	22
8	23	20	22	20	22	20
9	21	19	21	19	21	19
10	20	18	20	18	19	17

		50% beam angle 50.4°		10% beam angle 86.4°	
Mount height	Initial fc at beam center	Beam diameter	fc at beam edge	Beam diameter	fc at beam edge
8'	32.5	5.2'	16.3	10.3'	3.3
10'	17.5	7.1'	8.7	14.1'	1.7
12'	10.9	8.9'	5.4	17.9'	1.1
14'	7.4	10.8'	3.7	21.6'	0.7
16'	5.4	12.7'	2.7	25.4'	0.5

LGF 2/26DTT 7RW CHL, (2) 26W PL-C 26W/27SH lamp, 1.1 s/mh, 1800 rated lumens per lamp, test no. 2196010502

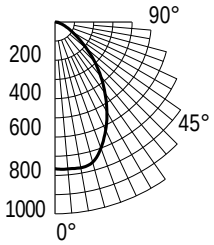

From 0°	cp.	Lumens
0°	764	
5°	768	74
15°	756	212
25°	623	288
35°	454	286
45°	291	277
55°	149	139
65°	72	74
75°	29	34
85°	10	11
90°	0	

Zone	Lumens	%lamp
0–30°	572	15.9
0–40°	857	23.8
0–60°	1222	34.0
0–90°	1340	37.2
90–180°	0	0.0
0–180°	1340	37.2*

* Efficiency

ρf	20%					
ρc	80%		70%		50%	
ρw	50%	30%	50%	30%	50%	30%
1	40	39	40	39	38	37
2	37	35	36	35	35	34
3	34	31	33	31	32	30
4	31	28	31	28	30	28
5	28	26	28	25	27	25
6	26	23	26	23	25	23
7	24	21	24	21	23	21
8	22	19	22	19	21	19
9	20	18	20	18	20	17
10	19	16	19	16	18	16

		50% beam angle 56.6°		10% beam angle 95.1°	
Mount height	Initial fc at beam center	Beam diameter	fc at beam edge	Beam diameter	fc at beam edge
8'	25.3	5.9'	12.6	12.0'	2.5
10'	13.6	8.1'	6.8	16.4'	1.4
12'	8.5	10.2'	4.2	20.8'	0.8
14'	5.8	12.4'	2.9	25.1'	0.6
16'	4.2	14.5'	2.1	29.5'	0.4

ELECTRICAL CHARACTERISTICS

	120 Volt HPF		277 Volt HPF		347 Volt HPF	
Lamp	Maximum current	Input watts	Maximum current	Input watts	Maximum current	Input watts
(2) 13TT/DTT	0.570	34.0	0.680	44.0	0.660	48.0
(2) 18DTT	0.720	48.0	0.340	50.0	0.480	52.0
(2) 26DTT	0.580	60.0	0.620	64.0	0.780	76.0

Tested to current IES and NEMA standards under stabilized laboratory conditions. Various operating factors can cause differences between laboratory data and actual field measurements. Dimensions and specifications are based on the most current available data and are subject to change without notice.

Conversion Factor

Use multiplier to determine candlepower, lumens and footcandles of other lamps.

13TT = .50; 13DTT = .48; 18DTT = .69

©1992 Lithonia Lighting, Rev. 11/96

LITHONIA LIGHTING
DOWNLIGHTING & TRACK SYSTEMS
1615 EAST ELMORE ST., CRAWFORDSVILLE, INDIANA 47933, TELEPHONE 317 362-1837, FAX 317 362-9083
IN CANADA: 1100 50TH AVE., LACHINE, QUEBEC H8T 2V3, DIVISION OF N.S.I. HOLDINGS, INC.