Type U
Desc: 2938-100 H - 1200R-277

REBELLE
ARCHITECTURAL LIGHTING

ORCA™ MAXI 2938 SERIES
WALL MOUNT - CAST ALUMINUM
ASYMMETRIC DISTRIBUTION

TYPE - U
2938-100H-1200R-277

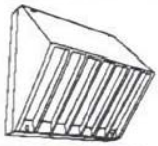

1. 4" OCTAGONAL J-BOX (BY OTHERS)
2. HOUSING - CAST ALUMINUM - GASKETTED TO WALL LOUVER COVER
3. BALLAST - H.P.F. CORE AND COIL - HID
4. REFLECTOR - SEMI-SPECULAR ALUMINUM - .021" THICK
5. LAMP (BY OTHERS)
6. FOUR POINT LOCKUP - STAINLESS STEEL CAP SCREWS - CAPTIVE
7. LOUVER COVER - CAST ALUMINUM
8. LENS - TEMPERED PRISMATIC GLASS

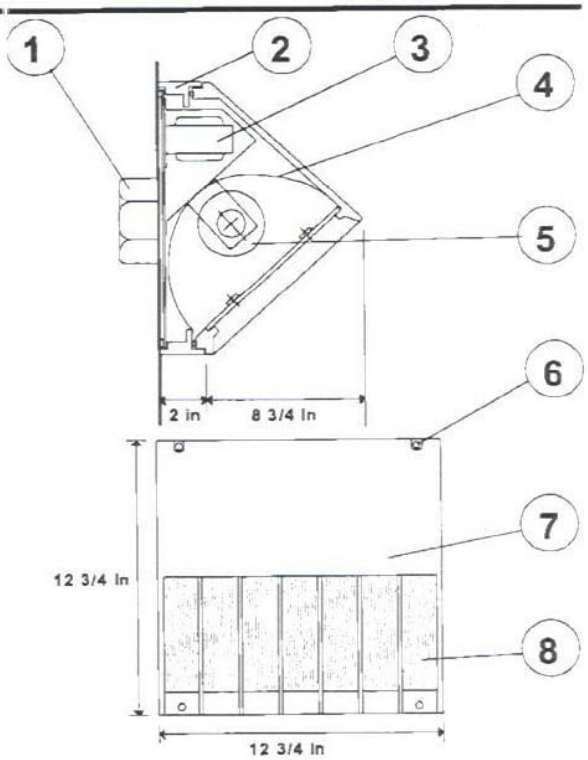

120 VOLT FINISH: BLACK-TEXTURE

NRTL CERTIFIED TO UL/CSA STANDARDS - WET LOCATION

FEATURES

HEAVY CAST ALUMINUM WALL MOUNT - UPLIGHT OR DOWNLIGHT ORIENTATION, SUITABLE FOR WET LOCATION, TEMPERED PRISMATIC GLASS LENS (OR POLYCARB). SEMI-SPECULAR ALUMINUM DIRECTIONAL REFLECTOR SYSTEM. INTEGRAL CAST LOUVERS. STAINLESS STEEL FASTENERS. FULLY GASKETTED LENS AND BACKPLATE.

SOURCE	WATTS	LAMP	CAT.NO
METAL HALIDE	175	ED-17 MEDIUM	2938-175H
METAL HALIDE	100	ED-17 MEDIUM	2938-100H
METAL HALIDE	70	ED-17 MEDIUM	2938-70H
HIGH PRESSURE SODIUM	100	ED-17 MEDIUM	2938-100S
HIGH PRESSURE SODIUM	70	ED-17 MEDIUM	2938-70S
COMPACT FLUORESCENT	1 X 32	TTT 32W TRIPLE	2938-132T
COMPACT FLUORESCENT	1 X 42	TTT 42W TRIPLE	2938-142T

OPTIONS AND ACCESSORIES	ADD SUFFIX
277 VOLT	277
347 VOLT	347
WHITE-TEXTURE	WT
SILVER-METALLIC	SM
ALUMINUM-NATURAL	AN
BRONZE	BZ
RAL COLOUR	SPECIFY #
COLOUR MATCH	PROVIDE SAMPLE

REV #4