1210 Series Recessed Cast Step/Walkway Luminaire 7 to 26 Watts

Type SR
1210-2-1/9PL-277 S.S.

TYPE - SR
1210-2-1/9PL-277-SS

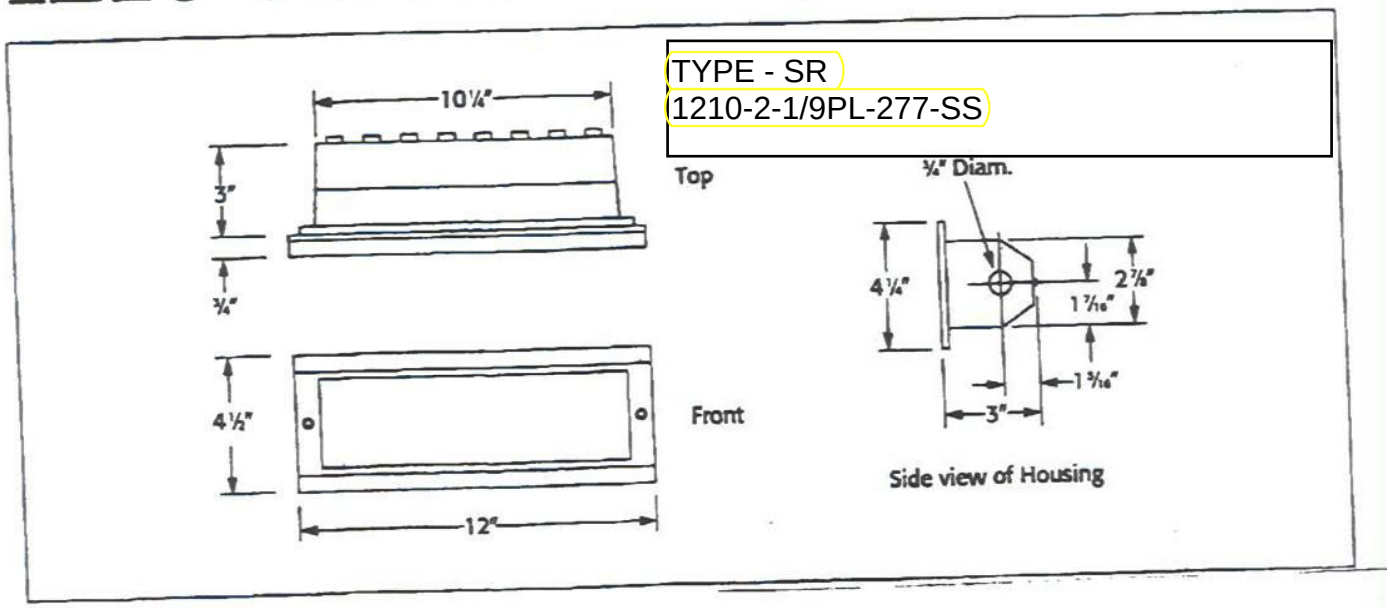

Face Plates

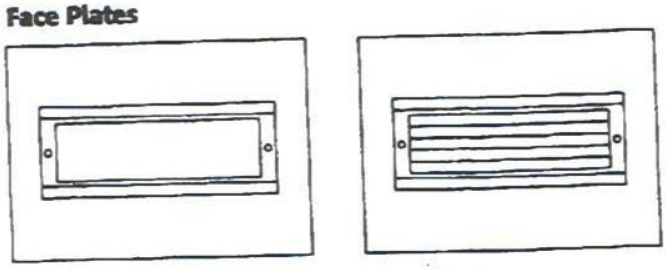

(1) – Full glass (2) – Louver

1210-2-1/PL-9W-120V-S.S. (STAINLESS STEEL)

Specifications

Housing
Heavy duty, one-piece diecast aluminum with stainless steel external hardware.

Lens/Gasketing
One-piece impact resistant, U.V. stabilized translucent white tempered glass with weather-proof o-ring extruded silicone gasket.

Electrical
Compact 5, 7, 9, or 13 watt pre-heat ballast or PLC electronic HPF ballast.

Finish
Black or white electrostatically applied baked enamel finish. Baked enamel finishes meet or exceed all AAMA requirements for 1,000 hour salt spray exposure. Interior of housing white baked enamel. (Note: Contact factory for custom exterior color)

Mounting
Factory pre-wired with high temperature wire. Completely assembled and tested prior to shipment.

Labels
ETL listed suitable for outdoor wet location.

Ordering Information (Lamps not included with fixture.)

Series	Lamp	Style	Lumen Output	Min. Starting Temp.
1210	1/PL-7W	Compact Fluorescent	400	0° F
	1/PL-9W	Compact Fluorescent	600	25° F
	1/PL-13W	Compact Fluorescent	860	32° F
	1/PLC-13W	Electronic Fluorescent	860	-10° F
	1/PLC-18W	Electronic Fluorescent	1250	-10° F
	1/PLC-26W	Electronic Fluorescent	1800	-10° F
	1/T10-25W	Incandescent	260	-50° F

Note: For optional plastic molded back box for rough-ins on concrete and brickwork add suffix "CPB".
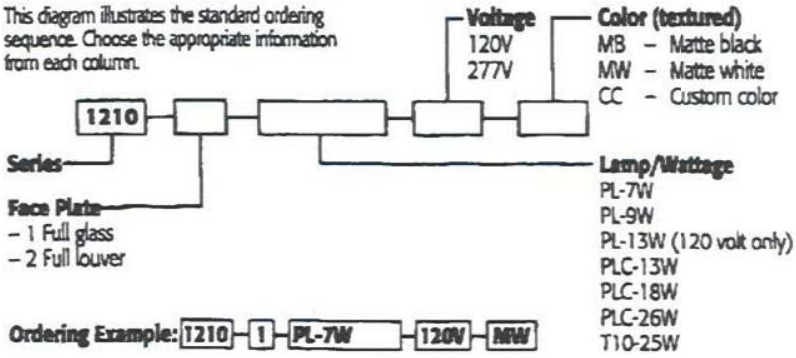
This diagram illustrates the standard ordering sequence. Choose the appropriate information from each column.