Type SN

CQ603112

Custom Pendant

TYPE - SN

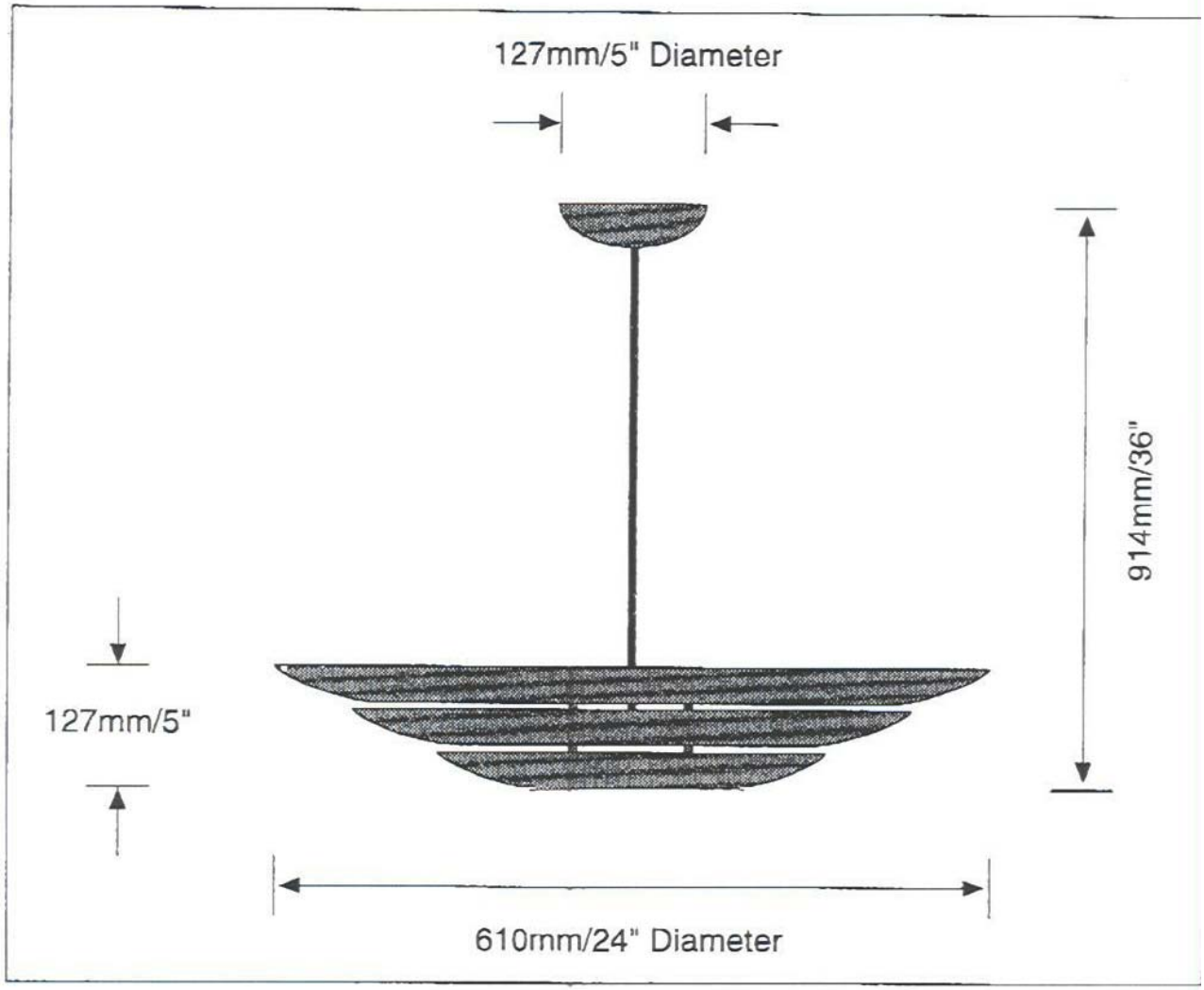

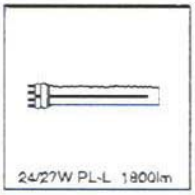

CQ603112
Custom pendant for 4X24/27W PL-L lamps.

GENERAL SPECIFICATION
Body and trim: Steel and aluminum
Suspension: Single tube with a white cable.
Finish: White powder coated.
Mechanical: Fixture mounts directly to an outlet box.
Ballasts: HPF electronic, 277V.
Certification: CSA, UL.

beta CALCO

Head Office,
Sales Enquiries and Manufacturing:
Beta-Calco Inc

Tel: (416) 531 9942
Fax: (416) 531 6199