TYPE SC -- FIXTURE # 2

Source Four™ Zoom 15°-30°

41530 Series

PHYSICAL

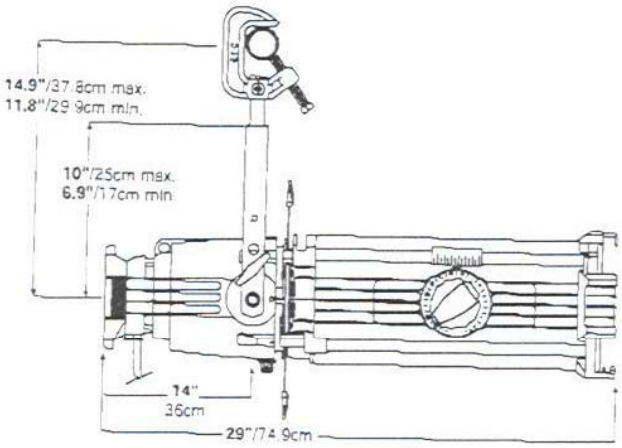

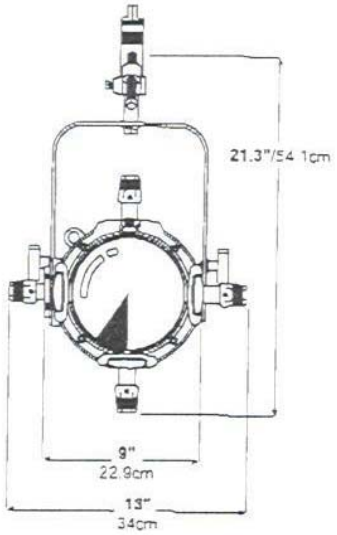

Source Four Zoom Weights

Model	Fixture Weight*		Shipping Weight	
	lbs	kgs	lbs	kgs
15/30°	21	9.5	29	13.2

* Add 2.3 lbs for C-clamp

LAMPS

Lamp code	Watts	Volts	Initial Lumens	Color Temp.	Average Rated Life	MF
HPL 750/115	750	115	21,900	3,250°	300	1.00
HPL 575/115	575	115	16,520	3,250°	300	0.87
HPL 575/115X	575	115	12,360	3,050°	2000	0.66
HPL 575/120	575	120	16,460	3,250°	300	0.87
HPL 375/115	375	115	10,540	3,200°	300	0.55
HPL 375/115X	375	115	8,060	3,000°	1000	0.43
HPL 550/77*	550	77	16,170	3,250°	300	0.87
HPL 550/77X*	550	77	12,160	3,050°	2000	0.66
HPL 750/230	750	230	19,400	3,200°	300	0.90
HPL 750/240	750	240	19,400	3,200°	300	0.90
HPL 575/230	575	230	14,900	3,200°	400	0.76
HPL 575/240	575	240	14,900	3,200°	400	0.76
HPL 575/230X	575	230	11,780	3,050°	1500	0.61
HPL 575/240X	575	240	11,780	3,050°	1500	0.64
HPL 375/230X	375	230	7,800	3,050°	1000	0.38
HPL 375/240X	375	240	7,800	3,050°	1000	0.38

*77V lamps are intended for use with the ETC Dimmer Doubler™.

Warning: Use of lamps other than HPL will void UL/cUL safety approval and product warranty. Source Four Zoom is rated for 750W maximum.