Powr-Connect™ Tap Connectors

Dual-Rated (Al/Cu) Parallel-Tap Connectors with Covers

- Electro tin-plated, high-strength aluminum alloy construction
- UL 486B Listed AL9CU – 105°C, 600V max.

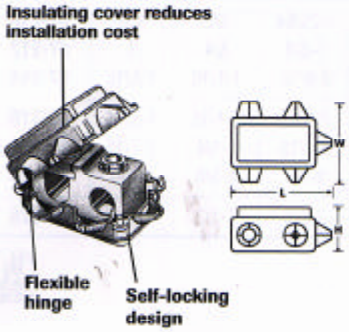

Model	Wire Range Main	Wire Range Tap	Strip Length (In.)	Dimensions (Inches) L	Dimensions (Inches) W	Dimensions (Inches) H	Cat. No.
GP-2C	2 – 12 AWG	4 – 14 AWG	5/8	2-7/32	1-29/32	1-7/64	**87-180**
GP-1/0C	1/0 – 2 AWG	1/0 – 14 AWG	3/4	2-5/8	2-5/32	1-1/4	**87-182**
GP-250-0C	250 KCMIL – 1/0 AWG	1/0 – 14 AWG	1-1/16	3-7/16	2-7/8	1-5/8	**87-184**
GP-250C	250 KCMIL – 1/0 AWG	250 KCMIL – 6 AWG	1-1/16	3-7/16	2-7/8	1-5/8	**87-186**
GP-350C	350 KCMIL – 4/0 AWG	350 KCMIL – 6 AWG	1-1/4	3-3/4	3-3/16	1-3/4	**87-190**
GP-500C	500 – 350 KCMIL	500 KCMIL – 2 AWG	1-3/8	4-3/8	3-5/16	2-3/32	**87-194**
GP-750C	750 – 500 KCMIL	500 KCMIL – 2 AWG	1-1/2	4-5/8	3-7/16	2-11/32	**87-198**

Dual-Rated (Al/Cu) Parallel-Tap Connectors without Covers

- Electro tin-plated, high-strength aluminum alloy construction
- UL 486B Listed AL9CU

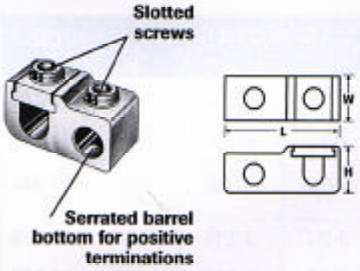

Model	Wire Range Main	Wire Range Tap	Strip Length (In.)	Dimensions (Inches) L	Dimensions (Inches) W	Dimensions (Inches) H	Cat. No.
GP-2	2 – 12 AWG	4 – 14 AWG	5/8	1-25/64	5/8	7/8	**87-150**
GP-1/0	1/0 – 2 AWG	1/0 – 14 AWG	3/4	1-3/4	3/4	1	**87-152**
GP-250-0	250 KCMIL – 1/0 AWG	1/0 – 14 AWG	1-1/16	2-1/32	1-1/16	1-5/16	**87-154**
GP-250	250 KCMIL – 1/0 AWG	250 KCMIL – 6 AWG	1-1/16	2-9/32	1-1/16	1-5/16	**87-156**
GP-350	350 KCMIL – 4/0 AWG	250 KCMIL – 6 AWG	1-1/4	2-9/16	1-1/4	1-7/16	**87-160**
GP-500	500 – 350 KCMIL	500 KCMIL – 2 AWG	1-3/8	3-1/8	1-3/8	1-3/4	**87-164**
GP-750	750 – 500 KCMIL	500 KCMIL – 2 AWG	1-1/2	3-3/8	1-1/2	2	**87-168**
GP-750-1	750 – 500 KCMIL	750 KCMIL – 1/0 AWG	3-5/32	3-3/8	3-5/32	2	**87-172**

Dual-Rated (Al/Cu) Tee-Tap Connectors with Covers

- Electro tin-plated, high-strength aluminum alloy construction
- UL 486B Listed AL9CU – 105°C, 600V max.

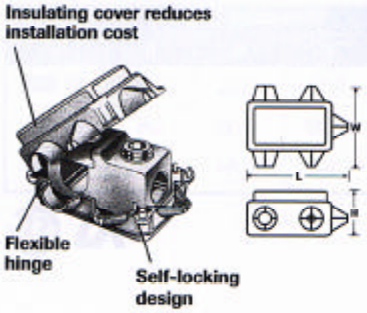

Model	Wire Range Main	Wire Range Tap	Strip Length (In.)	Dimensions (Inches) L	Dimensions (Inches) W	Dimensions (Inches) H	Cat. No.
GT-2C	2 – 12 AWG	4 – 14 AWG	5/8	2-7/32	1-29/32	1-7/64	**87-240**
GT-1/0C	1/0 – 2 AWG	1/0 – 14 AWG	3/4	2-5/8	2-5/32	1-1/4	**87-242**
GT-250-0C	250 KCMIL – 1/0 AWG	1/0 – 14 AWG	1-1/16	3-7/16	2-7/8	1-5/8	**87-244**
GT-250C	250 KCMIL – 1/0 AWG	250 KCMIL – 6 AWG	1-1/16	3-7/16	2-7/8	1-5/8	**87-246**
GT-350C	350 KCMIL – 4/0 AWG	350 KCMIL – 6 AWG	1-1/4	3-3/4	3-3/16	1-3/4	**87-250**
GT-500C	500 – 350 KCMIL	500 KCMIL – 2 AWG	1-3/8	4-3/8	3-5/16	2-3/32	**87-254**
GT-750C	750 – 500 KCMIL	500 KCMIL – 2 AWG	1-1/2	4-3/8	3-7/16	2-11/32	**87-258**