SC - Compatible Field Installable Multimode Fiber Optic Connector

Part #FCSC (3mm, Black Boot)

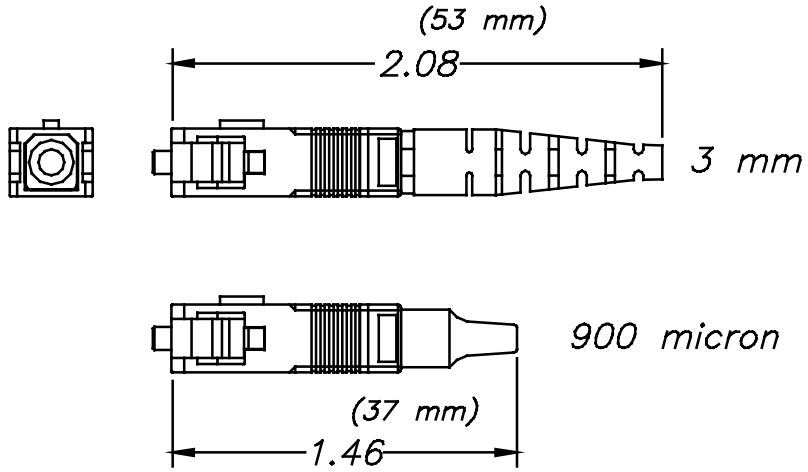

Description

The SC-compatible **multimode** connector is comprised of a plastic inner and outer body and a ceramic ferrule/spring/crimp barrel assembly plus a crimp oversleeve and rubber boot. Both a 3mm and 900 µm (micron) version are available. Refer to the diagram above for dimensional information.

The connector is precision made and manufactured to demanding specifications. The combination of a ceramic ferrule and a precision plastic housing provides consistent long-term mechanical and optical performance.

Connectors adhere to Bellcore GR-326 requirements.

Performance

125 µm fiber
Insertion loss: < 0.5 dB

Durability

< 0.2 dB change after 500 mating cycles

Intermateability

Optically and mechanically compatible with all SC equivalent connectors.

Operating Temperature

-40°C to 75°C

Ceramic Ferrule

Strict tolerance on bore diameter and concentricity achieves very low connection losses. Ceramic material assures the highest durability, low friction and superior clean wiping action.

HellermannTyton 7930 N. Faulkner Rd. Milwaukee,

Ferrule Specifications

Pre-radiused, PC-end finish for Physical Contact ferrule to ferrule
Outside diameter tolerance: ± 0.5 µm
Capillary diameter tolerance: 127 +4/-0 µm
Concentricity: ≤ 4 µm

Crimp Tool

Standard .128 Hex Die hand tool

Boot Colors

Multimode version available with Black boots

Product Packaging

Each connector is packaged individually. Instruction sheets are provided with each order.

Termination Procedures

Prep cable-end
Epoxy-Crimp-Polish

Connector-to-Connector Assembly

The SC-type connector offers simple connects and disconnects requiring only a push/ pull of the outer housing. The pulling of the cable will not unseat the connector without pulling on the outer shell.

WI 53224 414-355-1130 FAX 414-355-7341