Class 14

3 Phase and 1 Phase Magnetic Starters

Ambient Compensated
3 Phase Sizes 00–4

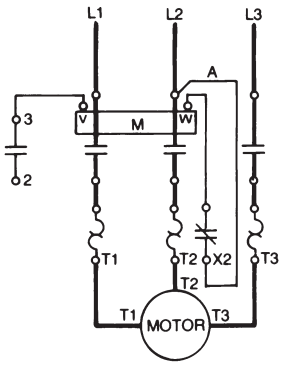

Ambient Compensated
Single Phase Sizes 00–2½

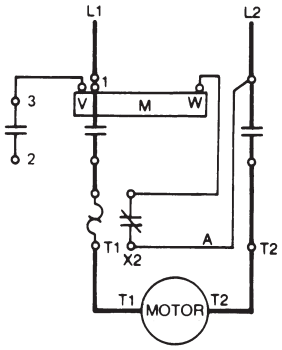

ESP100 3 Phase Sizes 0–4

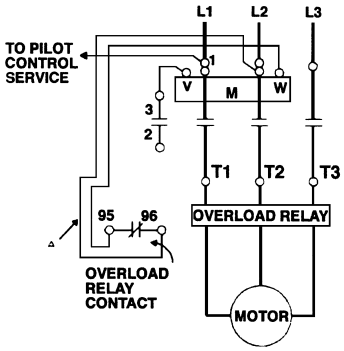

ESP100 3 Phase Sizes 4½, 5

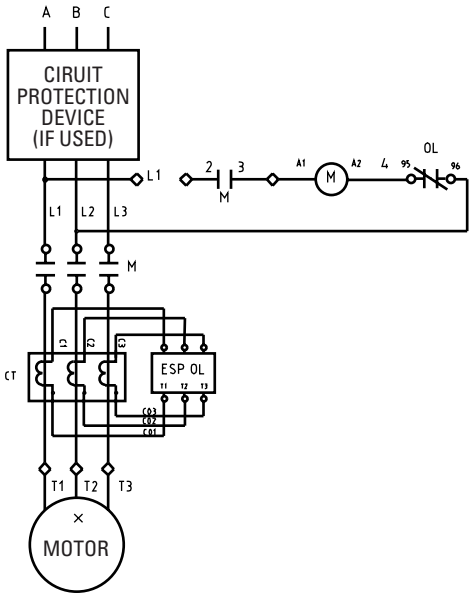

ESP100 3 Phase Sizes 6–7

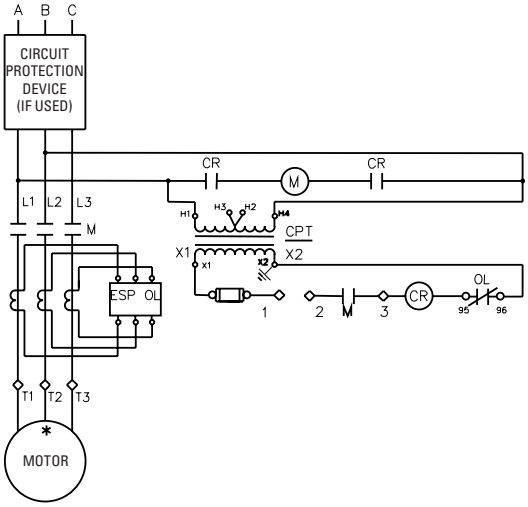

ESP100 Single Phase Sizes 0–1 (0.25 to 16A)

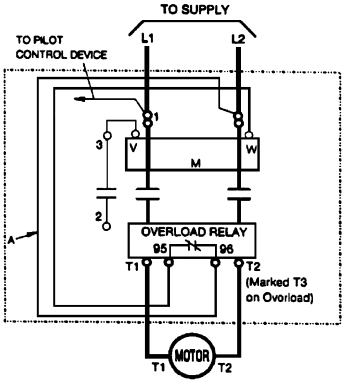

3 Phase Sizes 1¾–3
Applied on Single Phase①

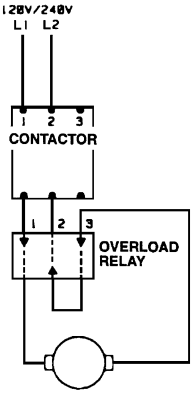

①For an approximate setting of a Single Phase motor application, multiply the motor nameplate by **.75** and set the dial on the overload to the resulting value.

The device must be wired with polarity as shown. Neutral and L1 wires must be wired as indicated on the drawing, polarity is indicated by ↑↓.

Class 17, 18

Three Phase Solid State and Thermal Overloads

Size 0–4

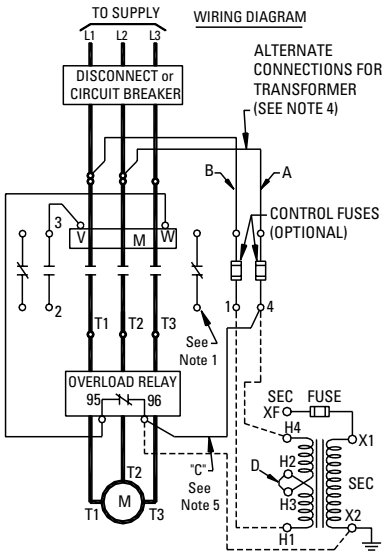

Size 4½, 5

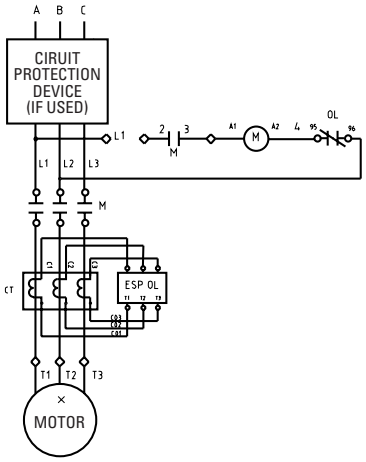

Size 6, 7

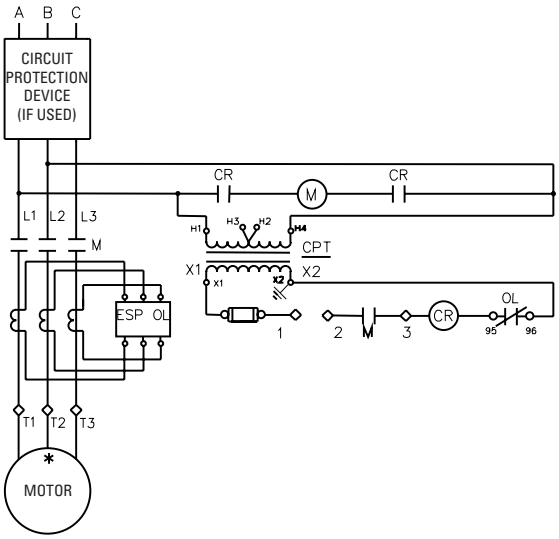

Class 22

Three Phase Solid State Overload

Sizes 0–1¾

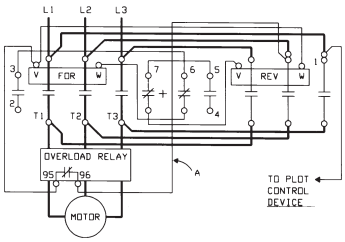

Sizes 2–4

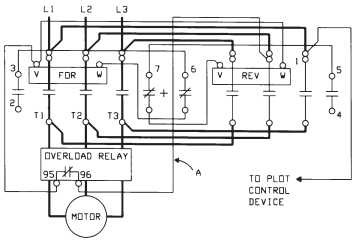

Size 4½, 5

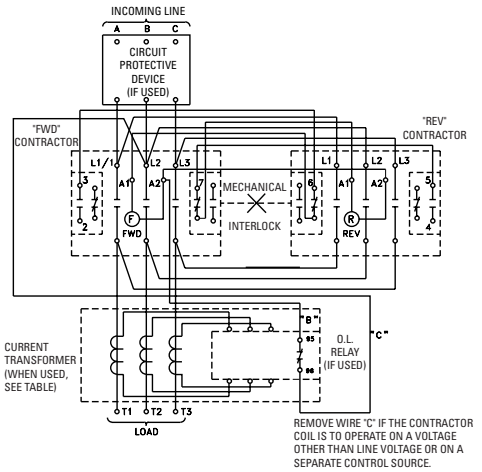

SIZE	CT RATIO
4½	300:5
5	300:5
6	600:5
7	1200:5

Three Phase Ambient Compensated Bimetal Overload

Sizes 0–4

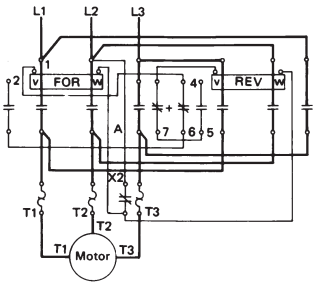

Single Phase Ambient Compensated Bimetal Overload

4 Wire Split Repulsion Induction 3 Pole—Sizes 0–1¾

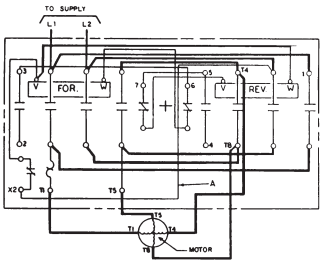

4 Wire Split Phase All Leads Broken 4 Pole—Sizes 0–1¾

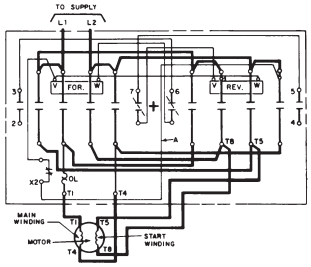

4 Wire Split Phase One Line Direct 3 Pole—Sizes 0–1¾

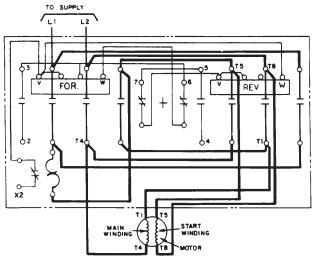

3 Wire, 2 Pole—Sizes 0–1¾

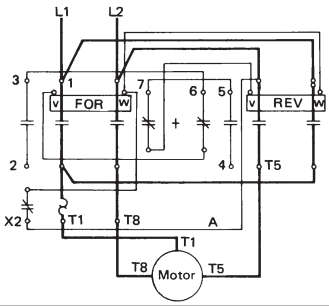

Class 25, 26

3 Phase Overloads

Size 0–4

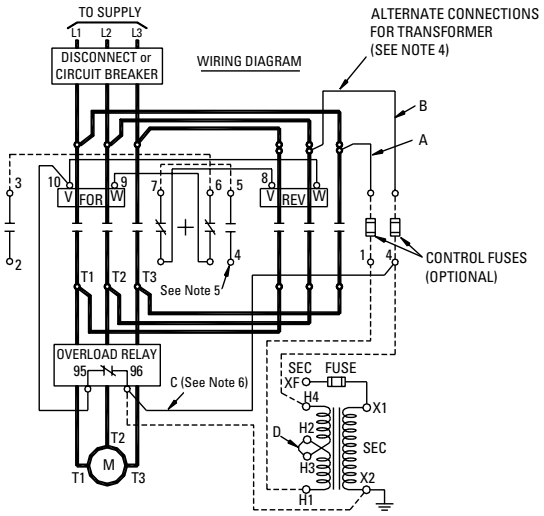

Size 4½, 5

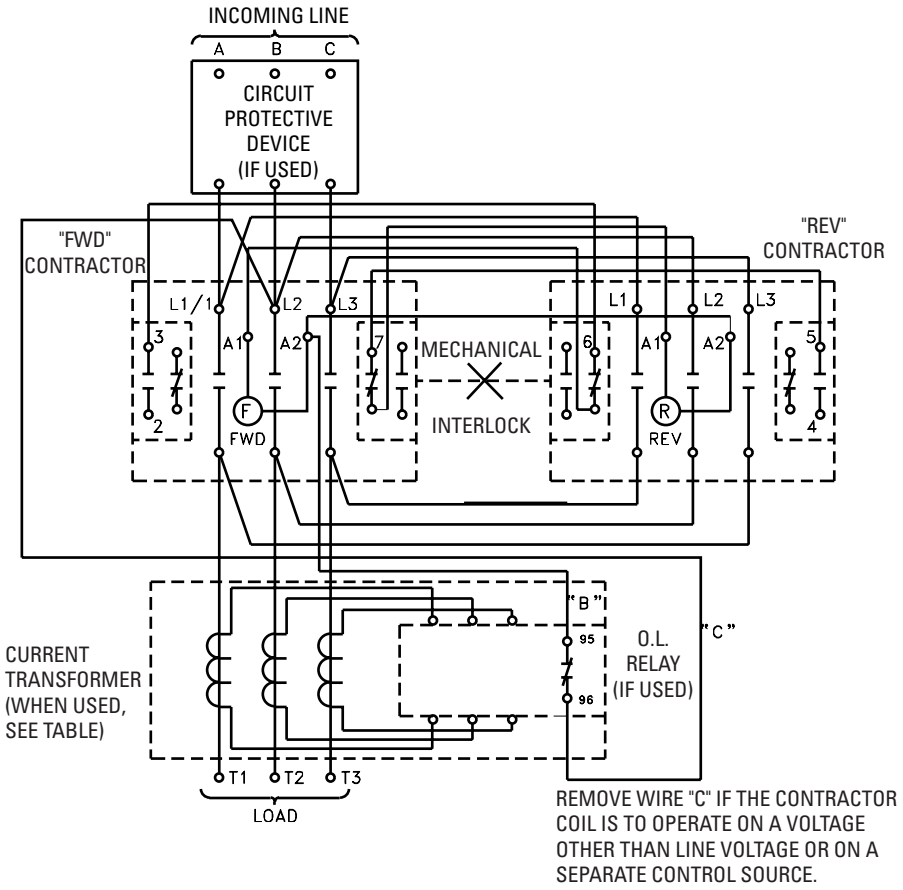

SIZE	CT RATIO
4½	300:5
5	300:5
6	600:5
7	1200:5

Class 30, 32 Size 0-4 (Typical)

1 Winding Constant Horsepower Size 0-1 3/4

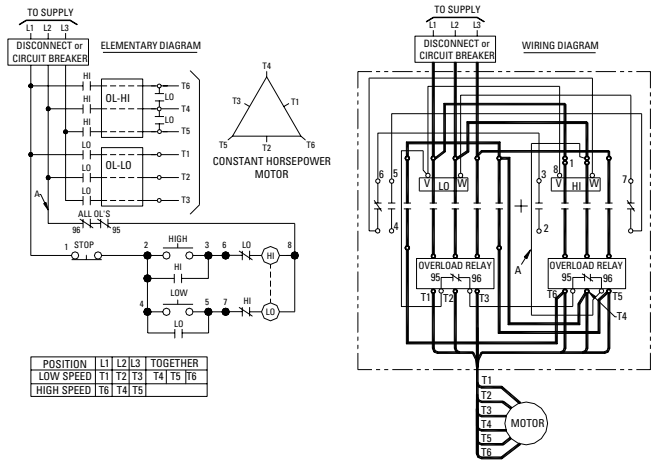

POSITION	L1	L2	L3	TOGETHER		
LOW SPEED	T1	T2	T3	T4	T5	T6
HIGH SPEED	T6	T4	T5			

1 Winding Constant Horsepower Size 2-4

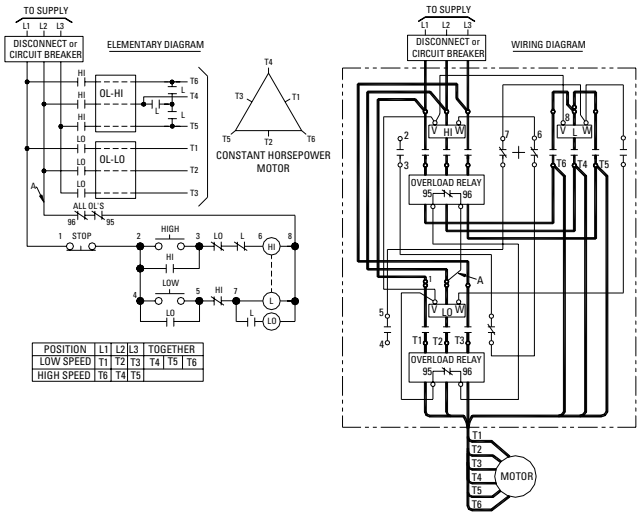

POSITION	L1	L2	L3	TOGETHER		
LOW SPEED	T1	T2	T3	T4	T5	T6
HIGH SPEED	T6	T4	T5			

4 Winding Constant or Variable Torque Size 0-1 3/4

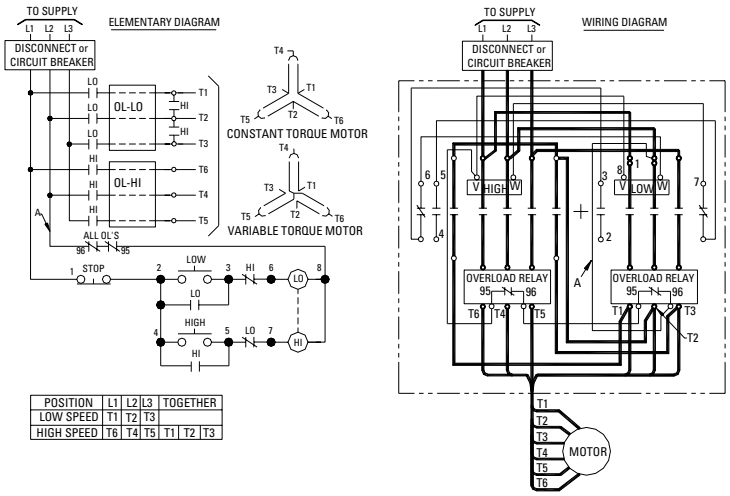

POSITION	L1	L2	L3	TOGETHER		
LOW SPEED	T1	T2	T3			
HIGH SPEED	T6	T4	T5	T1	T2	T3

Class 30, 32 Size 0-4 (Typical)

1 Winding Constant or Variable Torque Size 2-4

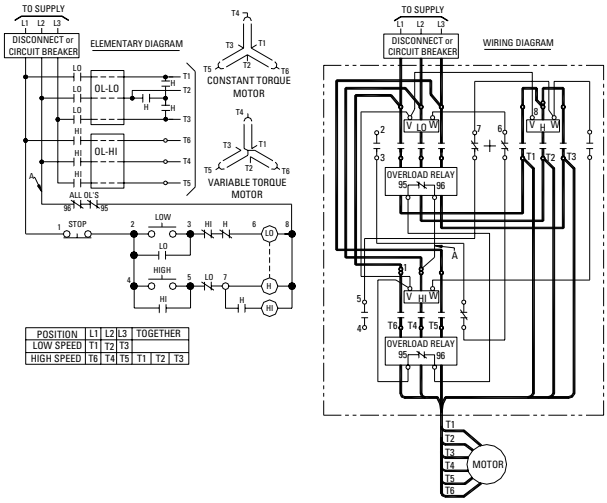

POSITION	L1	L2	L3	TOGETHER
LOW SPEED	T1	T2	T3	
HIGH SPEED	T6	T4	T5	T1 T2 T3

2 Winding Constant Horsepower & 2 Winding Consant or Variable Torque Size 0-4

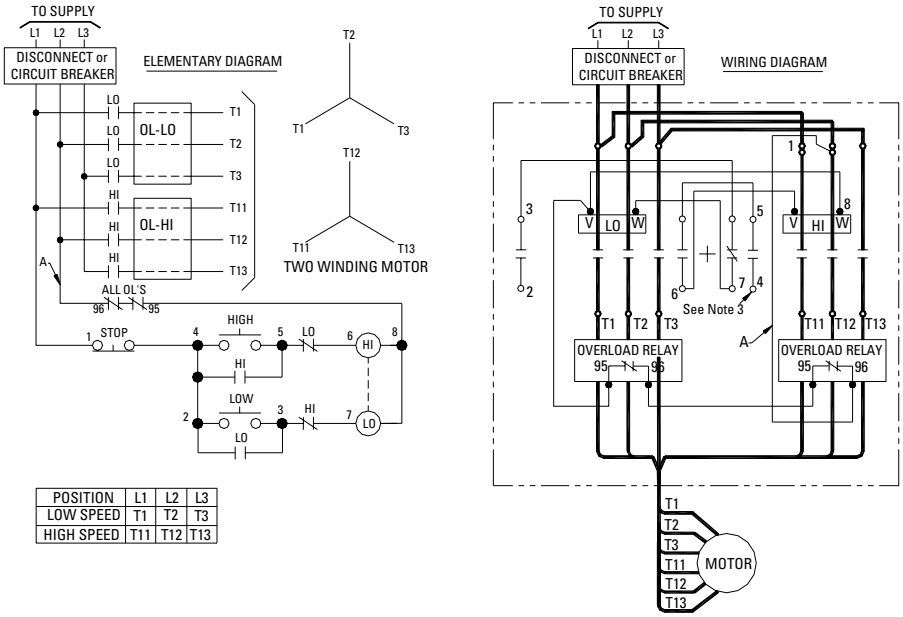

POSITION	L1	L2	L3
LOW SPEED	T1	T2	T3
HIGH SPEED	T11	T12	T13

Class 36, 37 Size 0–4 (Typical)

Auto Transformer Starter

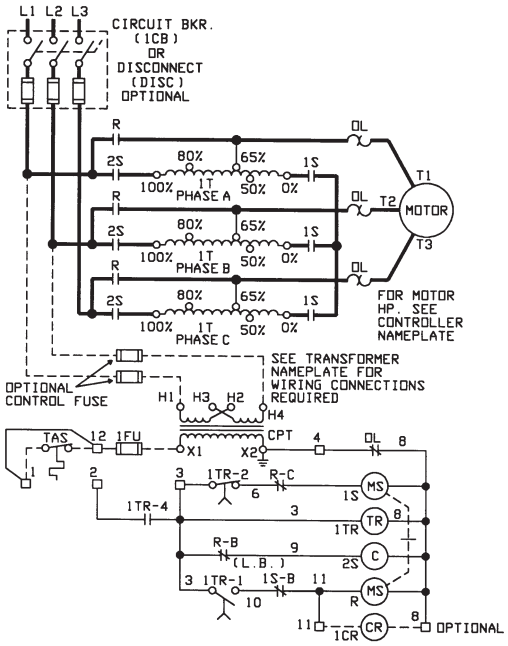

Two Step Part Winding Starter

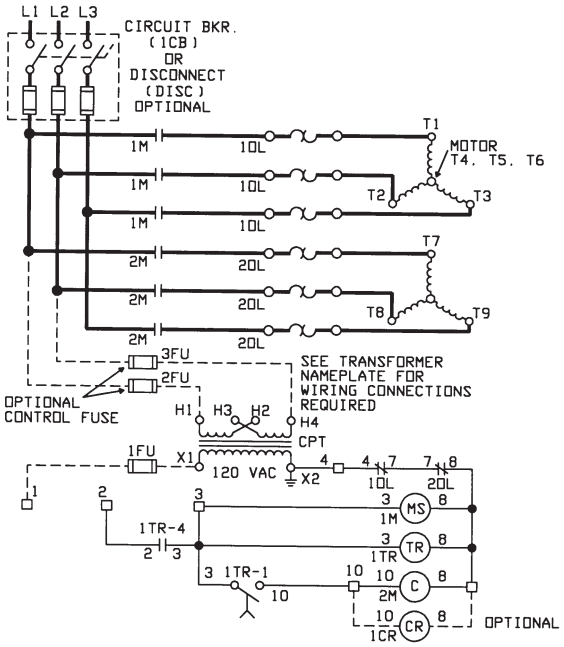

Wye-Delta Starter
Open Transition

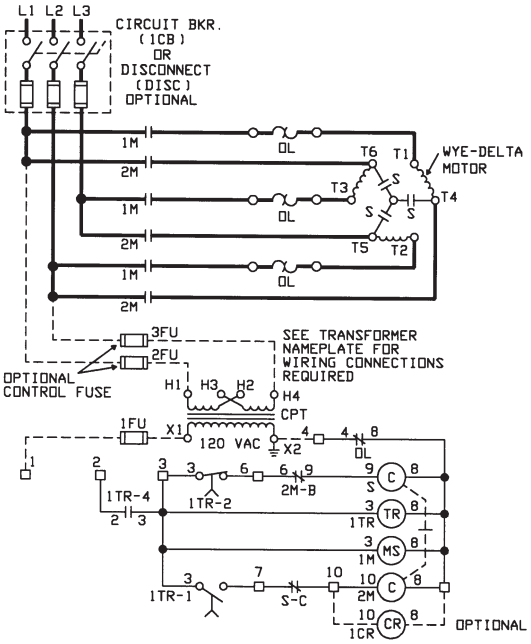

Wye-Delta Starter
Closed Transition

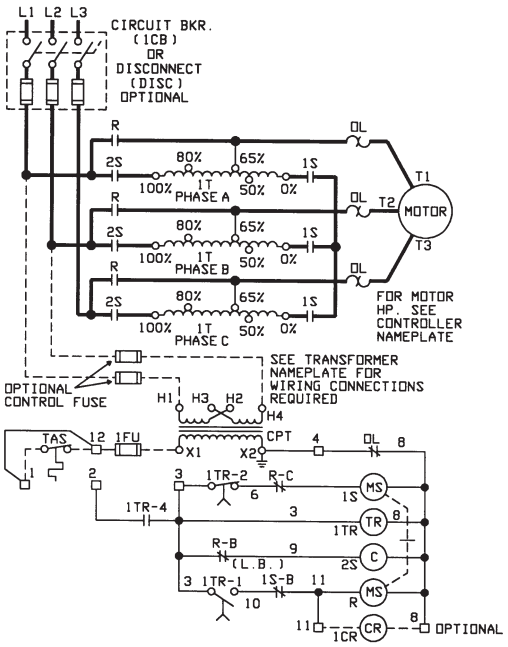

Class 36, 37 Size 4 1/2 – 7 (Typical)

Size 4 1/2–5 1/2
Autotransformer Starter (Typical)

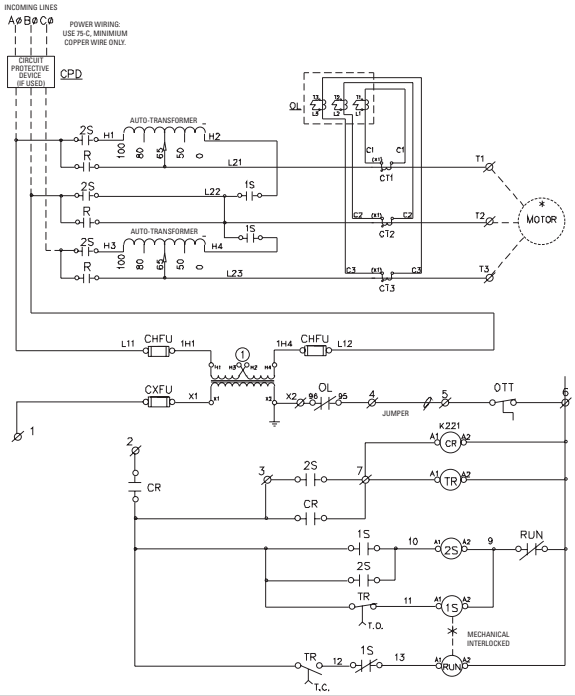

Size 6–7
Autotransformer Starter (Typical)

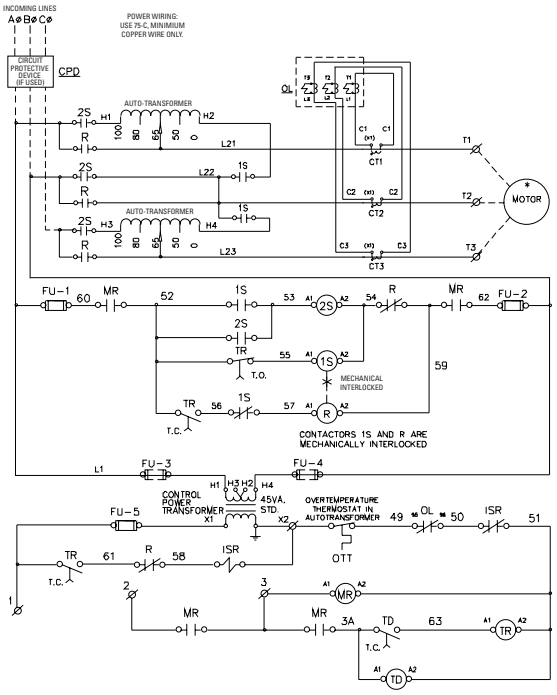

Size 4 1/2–7①
Part-Winding

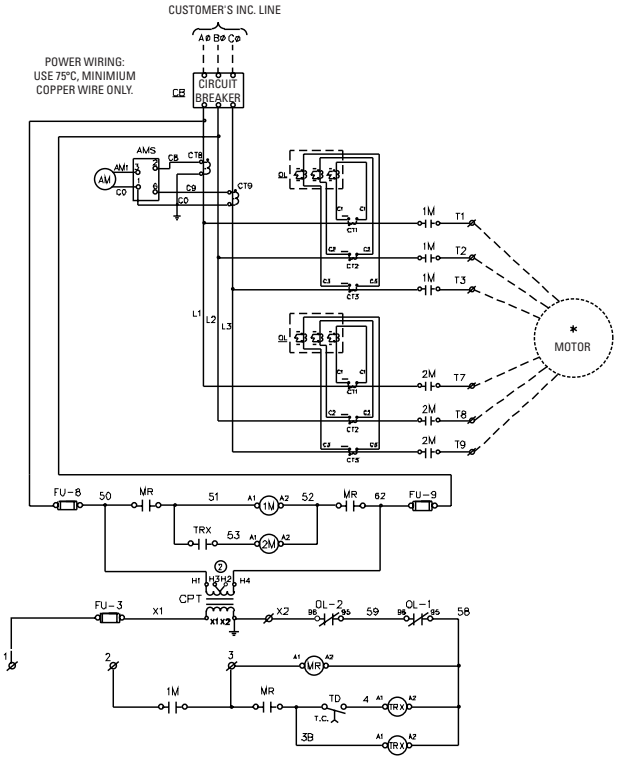

①NEMA size 6 and larger contactor coils are at line voltage. NEMA size 6 and larger supplied with current transformers.

Class 36, 37 Size 4 1/2 – 7 (Typical)

Wye Delta Open Transition①②

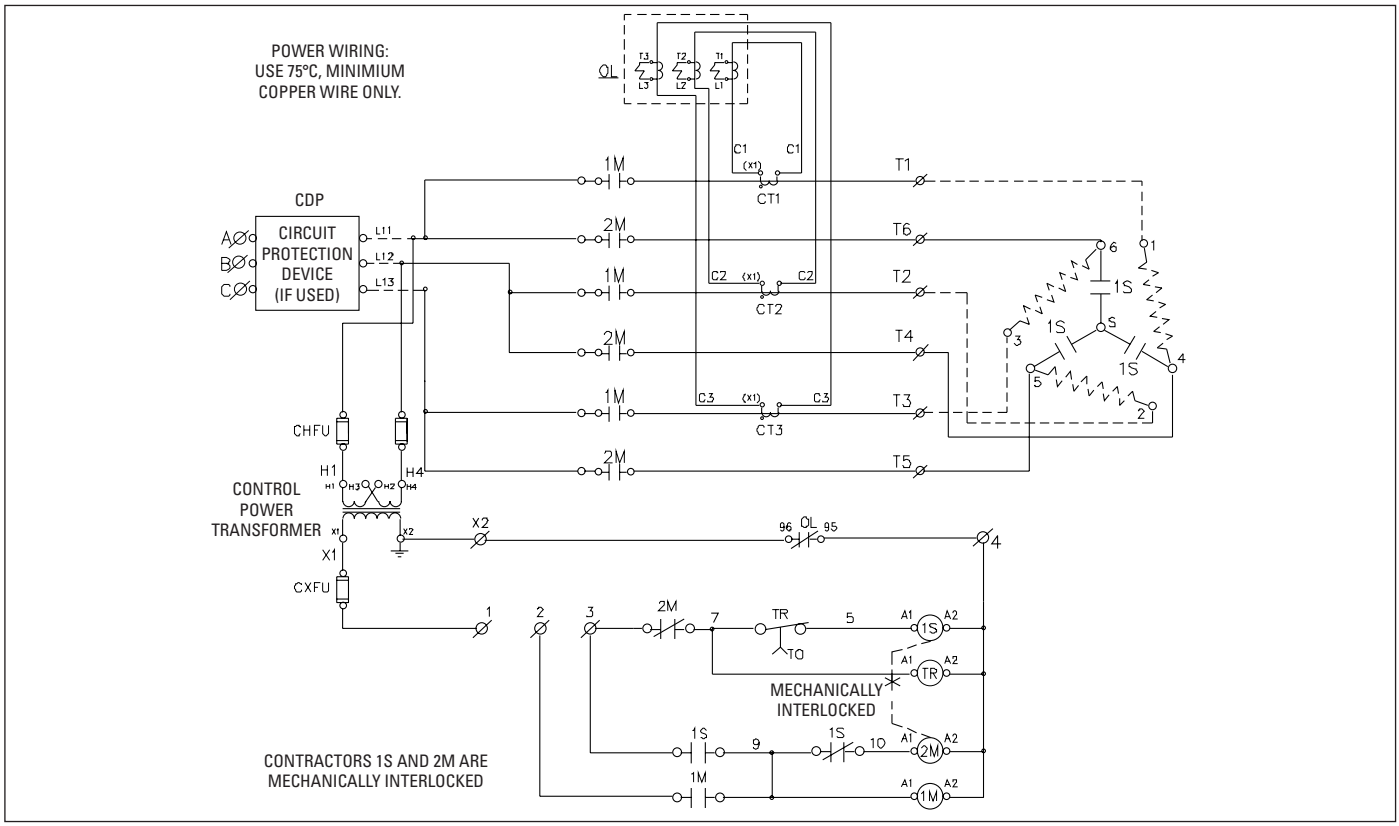

Wye Delta Closed Transition①②

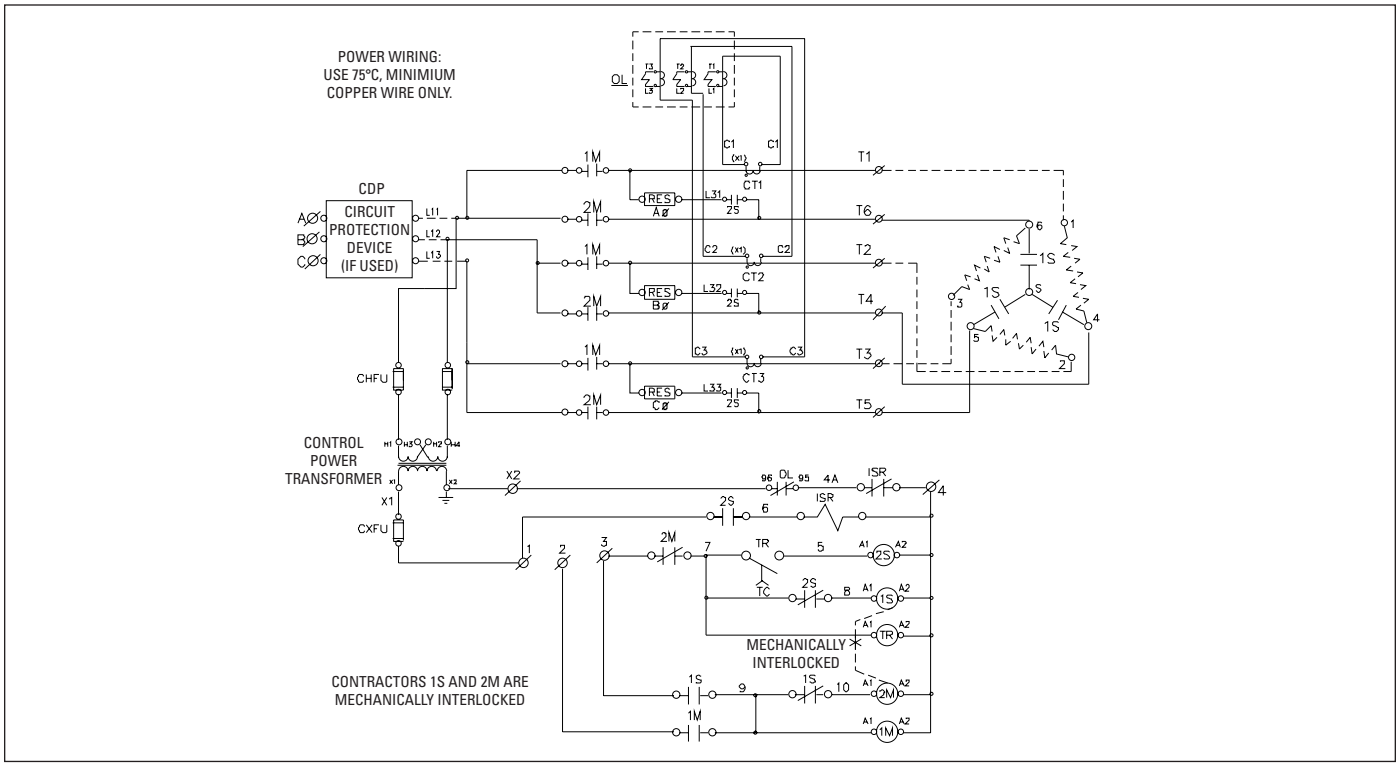

①NEMA Size 5 and larger supplied with current transformers.

②NEMA Size 6 and larger contactor coils are at line voltage.

Class 40, 43

3 Pole 3 Phase Magnetic Contactors and Reversing Contactors

3 Phase Contactors—Size 00–4

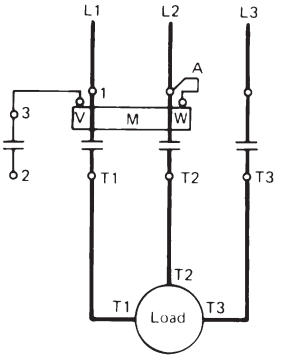

3 Phase Reversing Contactors—Size 00–4

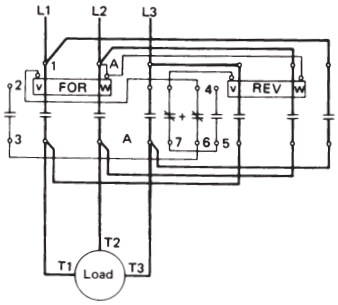

Size 4½–5

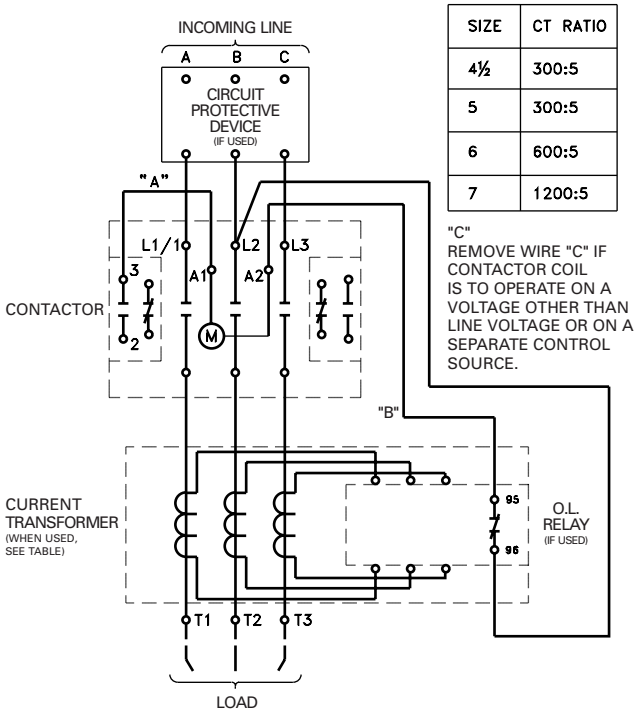

SIZE	CT RATIO
4½	300:5
5	300:5
6	600:5
7	1200:5

"C"
REMOVE WIRE "C" IF CONTACTOR COIL IS TO OPERATE ON A VOLTAGE OTHER THAN LINE VOLTAGE OR ON A SEPARATE CONTROL SOURCE.

3 Phase Reversing Contactors—Size 4½, 5

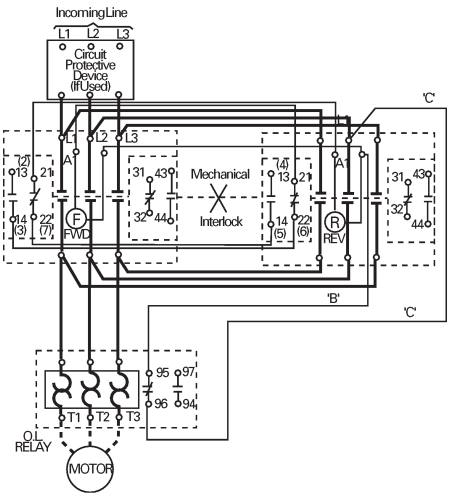

2 Pole 1 Phase Magnetic Contactors and Reversing Contactors

Size 00-3½

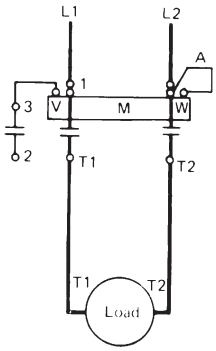
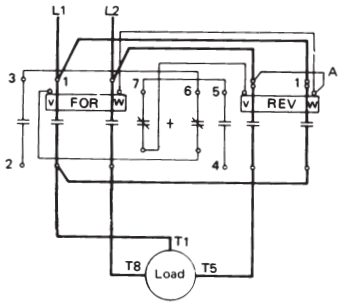
Single Phase Reversing Contactors—Size 00–1¾