CLA-VAL™

AUTOMATIC CONTROL VALVES

March 1, 2001

Suggested Price List

CLA-VAL

50-01 Pressure Relief Valve

Uses 100-01 Hytrol

50-01 Ductile Iron Body, Bronze Trim

Size	Screwed 300 Lb	Flanged 150 Lb	Flanged 300 lb	Wt/Lb
1-1/4	$ 733	$ —	$ —	30
1-1/2	733	863	—	35
2	749	877	896	45
2-1/2	913	924	1104	60
3	966	1012	1132	80

50-01B Ductile Iron Body, Bronze Trim

Size	Flanged 150 Lb	Flanged 300 Lb	Wt/Lb
4	$ 1459	$ 1492	150
6	2138	2393	295
8	3498	3925	505
10	4834	5155	790
12	7873	8196	1175
14	13798	14101	1600
16	14760	15834	2265
24	Consult Factory		6200

Optional Features: See Page 4
Adjustment Ranges: 0-75, 20-200, 100-300 psi
For adjustment range of 100-450 psi add $721.

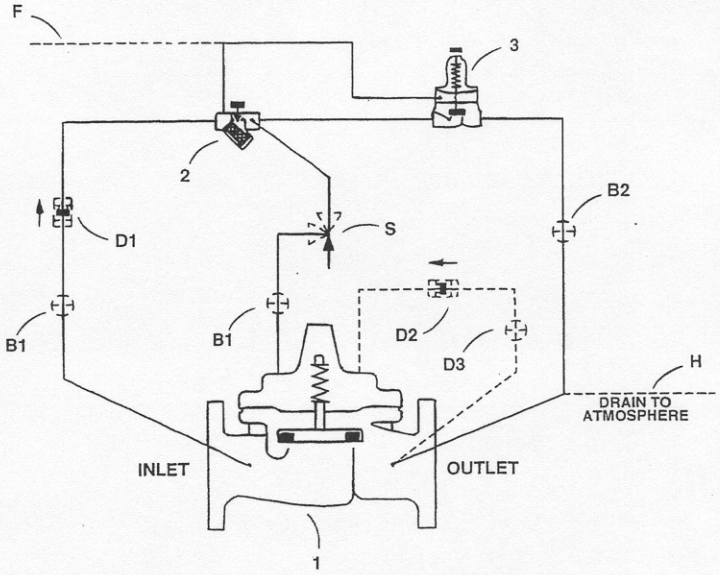

BASIC COMPONENTS
1 100-01 Hytrol (Main Valve)
2 X42N-2 Strainer Needle Valve
3 CRL Pressure Release Control

OPTIONAL FEATURES
B CK2 Cock (Isolation Valves)
D Check Valves with Cock
F Remote Sensing
H Drain to Atmosphere
S Opening Speed Control

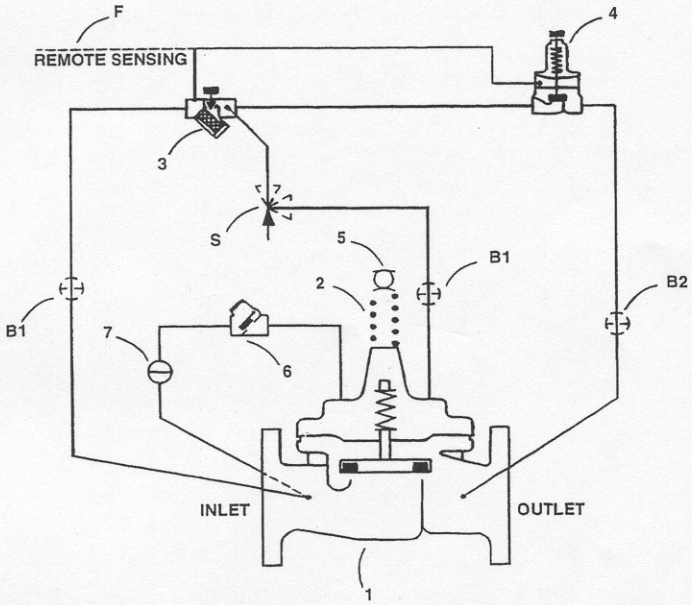

BASIC COMPONENTS
1 100-01 Hytrol (Main Valve)
2 X103 Spring Lift Assy
3 X42N-2 Strainer Needle Valve
4 CRL Pressure Relief Control
5 Vacuum Breaker & Air Release
6 CDC/CSC Check Valve
7 CK2 Cock

OPTIONAL FEATURES
B CK2 Cocks-Isolation Valves
F Remote Sensing
S Opening Speed Control

50-05 Combination Pressure Relief, Air Release and Vacuum Breaker Valve

Uses 100-01 Hytrol

50-05 Ductile Iron Body, Bronze Trim

Size	Screwed 300 Lb	Flanged 150 Lb	Flanged 300 lb	Wt/Lb
1-1/4	$ 1292	$ —	$ —	40
1-1/2	1292	1478	—	40
2	1368	1572	1648	45
2-1/2	1587	1595	1694	60
3	1736	1810	1885	75

50-05B Ductile Iron Body, Bronze Trim

Size	Flanged 150 Lb	Flanged 300 Lb	Wt/Lb
4	$ 2138	$ 2168	155
6	2575	2804	300
8	4181	4535	515
10	5742	6299	795
12	9543	9858	1185
14	15512	15975	1610
16	15899	17192	2270
24	Consult Factory		6200

Optional Features: See Page 4
Adjustment Ranges: 0-75, 20-200, 100-300 psi
For adjustment range of 100-450 psi add $721.

CLA-VAL
(949) 722-4800
P.O. Box 1325
Newport Beach, CA 92659

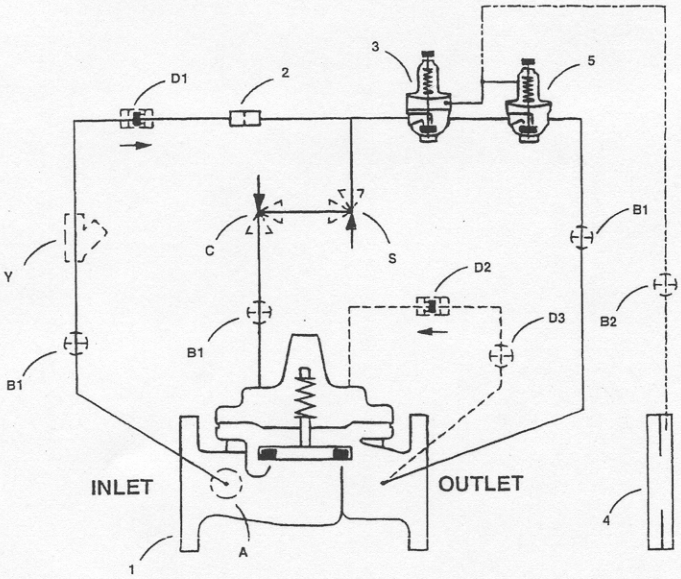

BASIC COMPONENTS
1 100-20 Hytrol (Main Valve)
2 X58C Restriction Filling
3 CRA Pressure Reducing Control
4 X52E Orifice Plate Assembly
5 CDHS18 Differential Control

OPTIONAL FEATURES
A X46A Flow Clean Strainer
B CK2 Cock (Isolation Valve)
C CV Flow Control (Closing)
D Check Valves with Cock
S Opening Speed Control
Y X43 "Y" Strainer

649-01 Combination Rate of Flow and Pressure Reducing Valve

Uses 100-20 Hytrol
Includes Orifice Plate and Orifice Plate Flange

649-01A Ductile Iron Body, Bronze Trim

Size	Flanged 150 Lb	Flanged 300 Lb	Wt/Lb
3	$ 1550	1987	70
4	1762	2542	100

For angle pattern valves consult factory for price.

649-01AB Ductile Iron Body, Bronze Trim

Size	Flanged 150 Lb	Flanged 300 Lb	Wt/Lb
6	$ 2479	3468	180
8	3469	5005	300
10	4464	5283	485
12	6960	8453	830
14	Consult Factory		1250
16	11365	12911	1300
18	Consult Factory		2733
20	23385	30347	2800
24	27481	31322	3000
30	Consult Factory		6500

Optional Features: See Page 4
When ordering specify minimum, normal, maximum gpm and psi.
Downstream Pressure Range: 2-30, 15-75, 30-300 psi
For angle pattern valves consult factory for price.

650-01 Pressure Relief/Pressure Sustaining Valve

Uses 100-20 Hytrol

650-01 Ductile Iron Body, Bronze Trim

Size	Flanged 150 Lb	Flanged 300 Lb	Wt/Lb
3	$ 908	1230	60
4	1129	1910	90

For angle pattern valves consult factory for price.

650-01B Ductile Iron Body, Bronze Trim

Size	Flanged 150 Lb	Flanged 300 Lb	Wt/Lb
6	$ 1573	2562	160
8	2471	4005	280
10	3634	4112	440
12	6067	7560	780
14	Consult Factory		1250
16	9967	11511	1210
18	Consult Factory		2733
20	20372	27333	2740
24	22617	28691	2940
30	Consult Factory		6500

Optional Features: See Page 4
Adjustment Range CRL : 0-75, 20-200, 100-300 psi
For angle pattern valves consult factory for price.

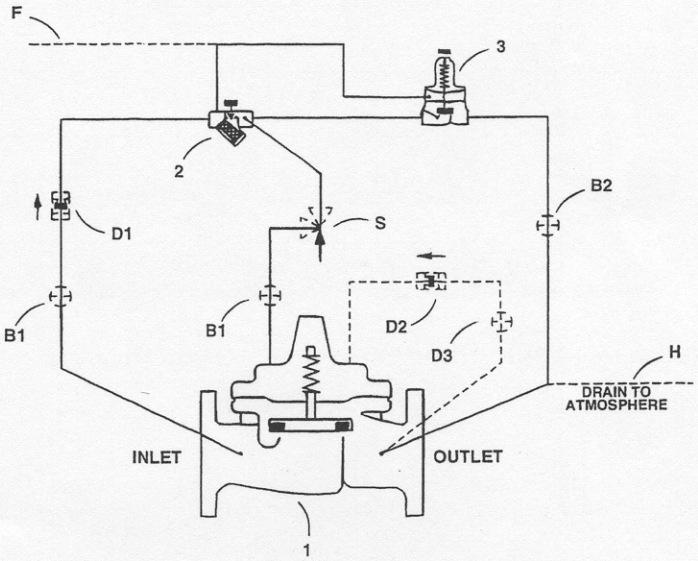

BASIC COMPONENTS
1 100-20 Hytrol (Main Valve)
2 X42N-2 Strainer & needle valve
3 CRL Pressure Relief Control

OPTIONAL FEATURES
B CK2 Cock (Isolation Valves)
D Check Valves with Cock
F Remote Sensing
H Atmospheric Drain
S Opening Speed Control