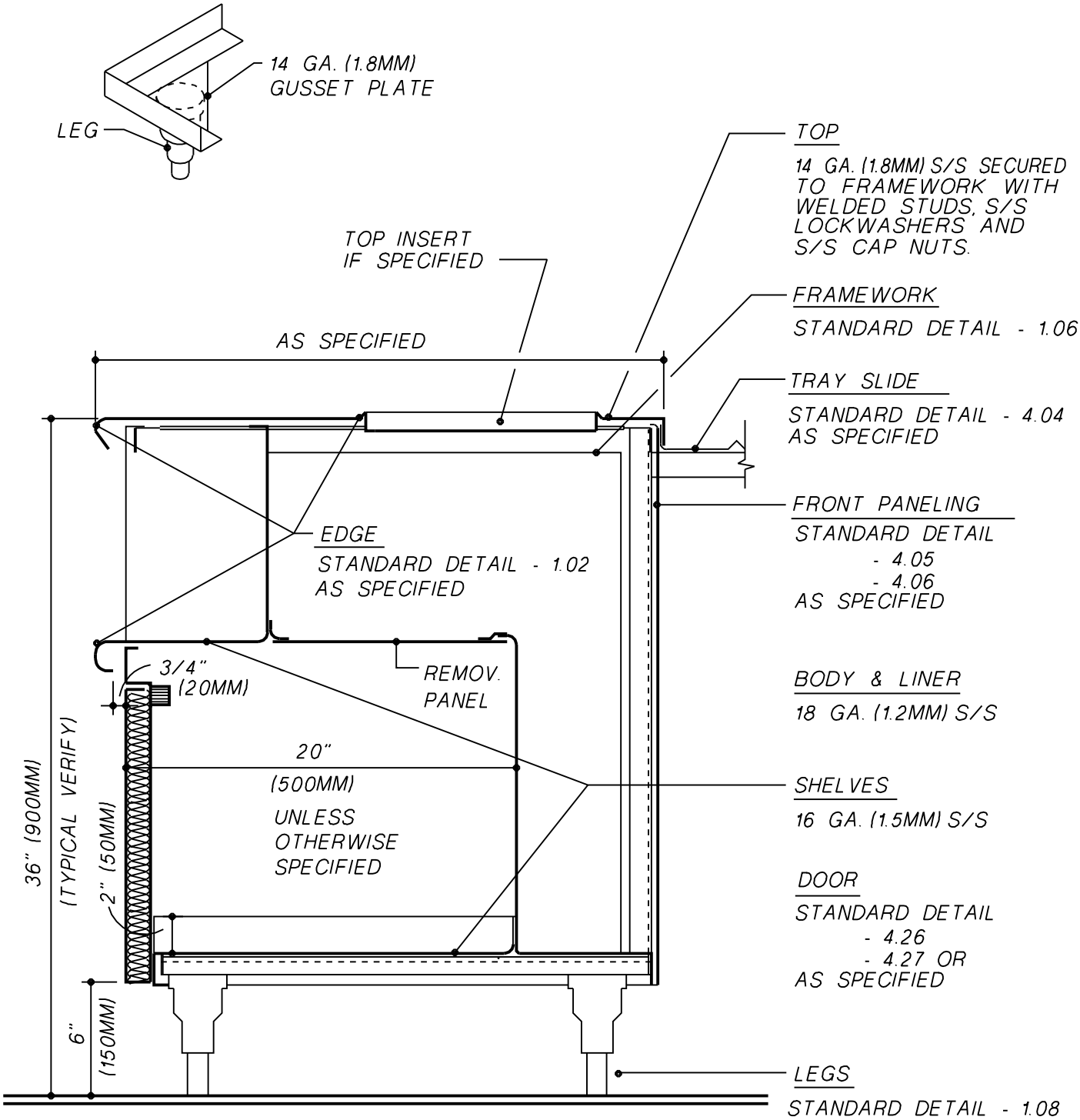

TYPICAL SECTION

NOTE: POP RIVETS, EXPOSED STUDS AND CAP NUTS NOT ACCEPTABLE.

WELDED TO MULLION. MAXIMUM 48" (1220MM) O.C.

APPROVED: 08-01-01

CINI•LITTLE

CAFETERIA COUNTERS

NO SCALE SEE ALSO 1.02, 1.06, 1.08, 4.04, 4.05, 4.06, 4.26, & 4.27

STANDARD DETAIL

4.03