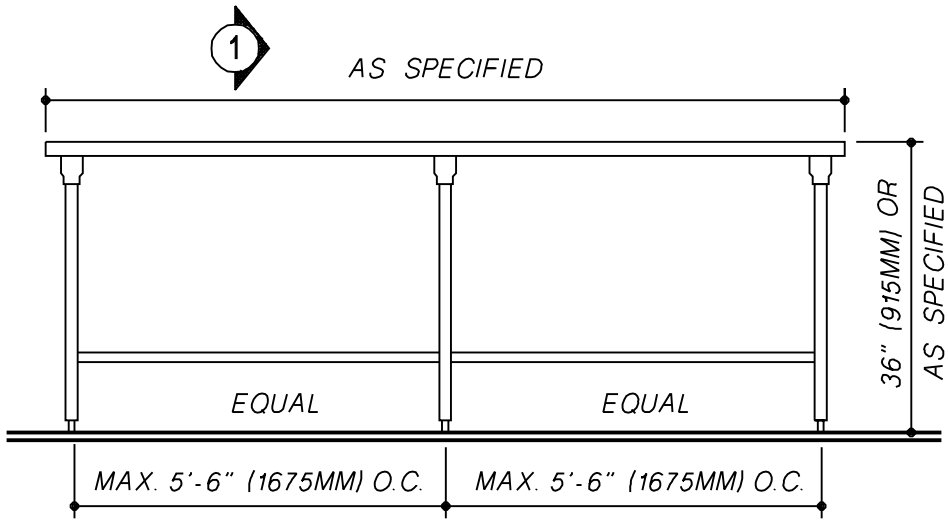

FRONT ELEVATION

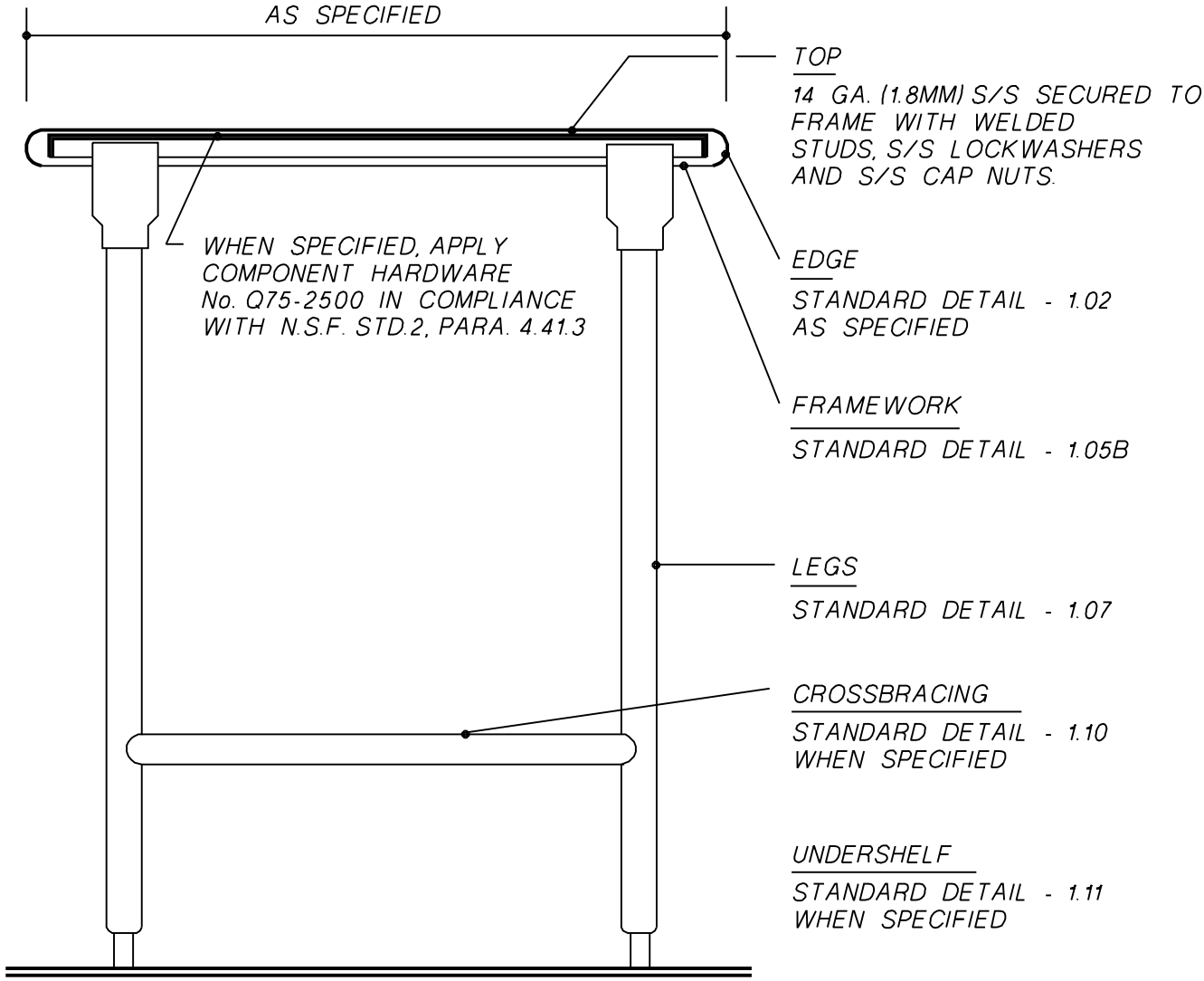

SECTION 1

APPROVED: 08/01/01

CINI•LITTLE

WORK TABLE

NO SCALE SEE ALSO 1.02, 1.05, 1.07, 1.10, 1.11

STANDARD DETAIL

2.01

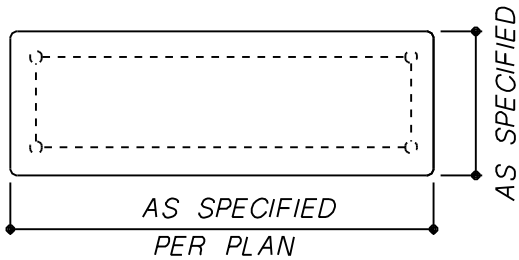

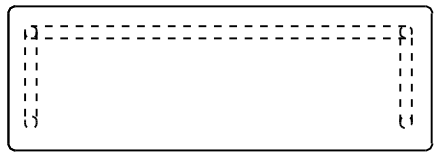

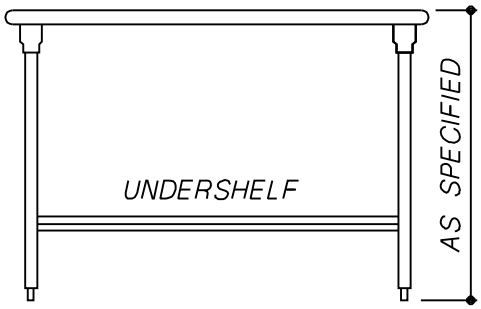

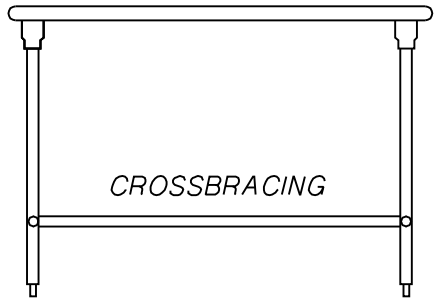

"A" ISLAND TABLE-UNDERSHELF

"B" ISLAND TABLE-CROSSBRACING

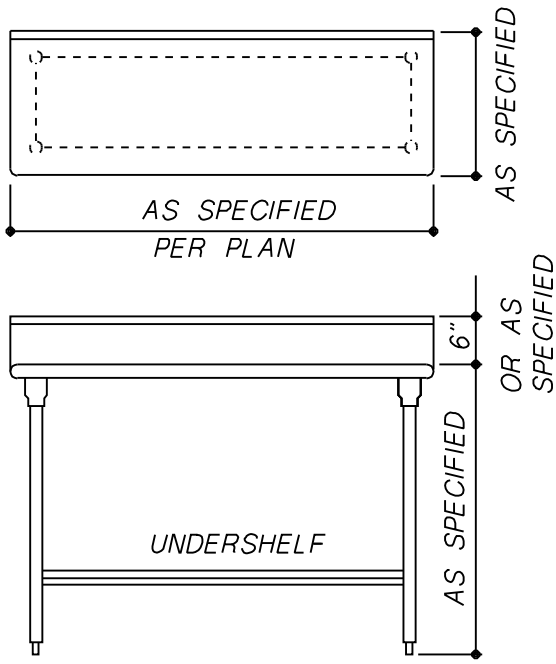

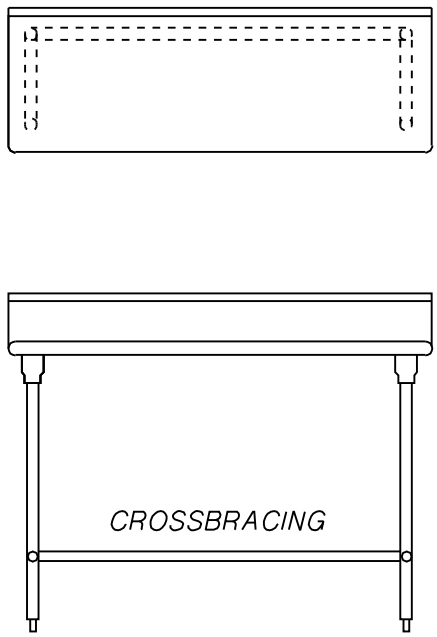

"C" TABLE W/SPLASH-UNDERSHELF

"D" TABLE W/ SPLASH-CROSSBRACING

APPROVED: 08/01/01

CINI•LITTLE

WORK TABLES-TYPE

NO SCALE SEE ALSO 1.02, 1.05, 1.07, 1.10, 1.11

STANDARD DETAIL

2.01.1

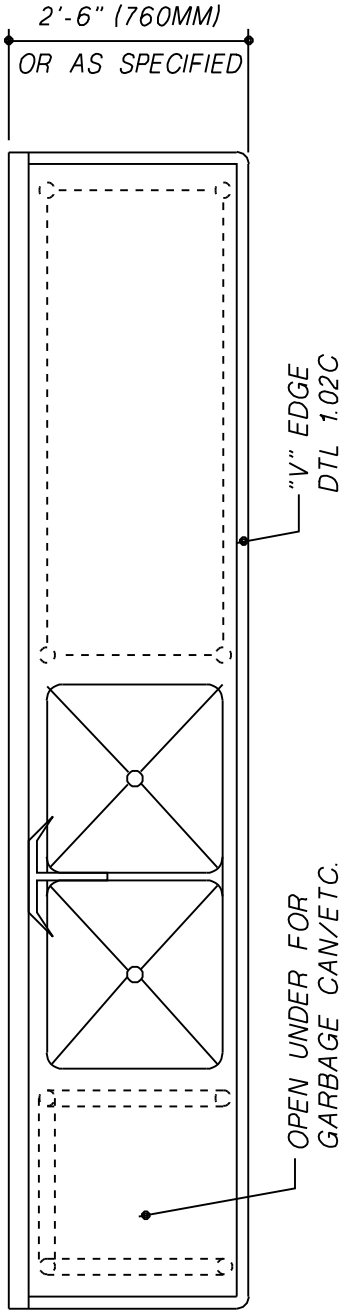

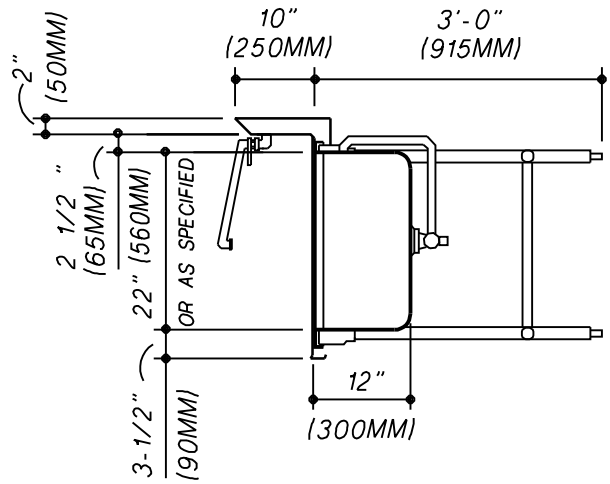

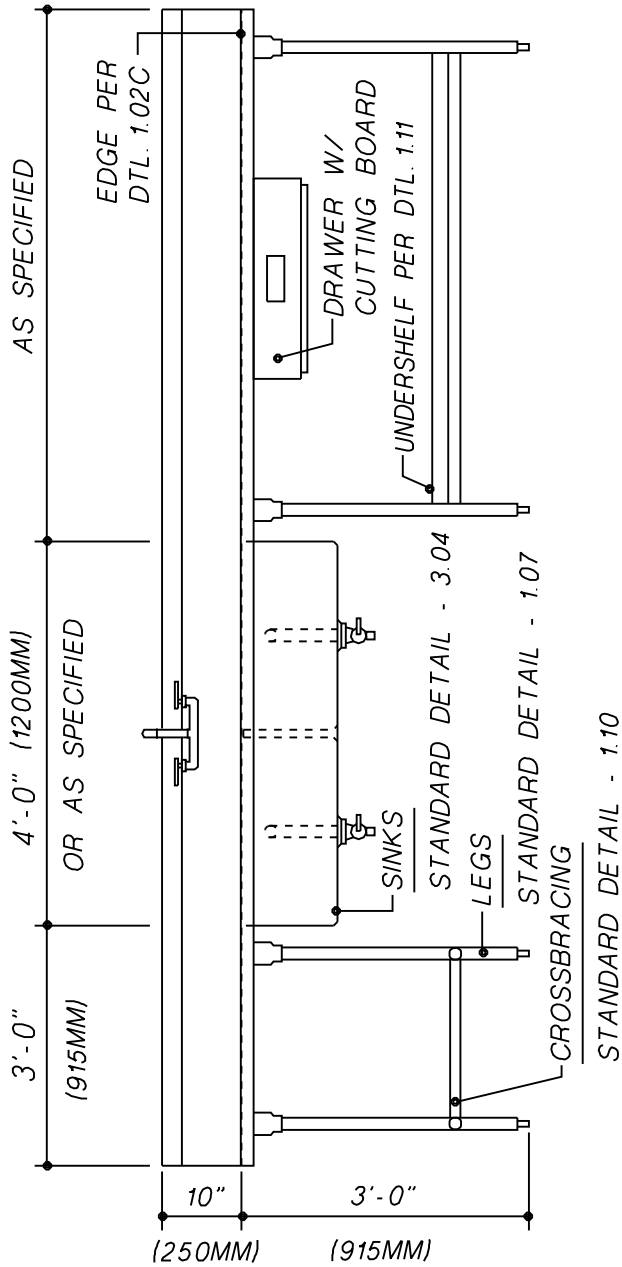

APPROVED: 08/01/01

CINI•LITTLE

PREP. TABLE WITH SINKS

NO SCALE SEE ALSO 1.02, 1.05, 1.07, 1.10, 1.11

STANDARD DETAIL

2.01.2