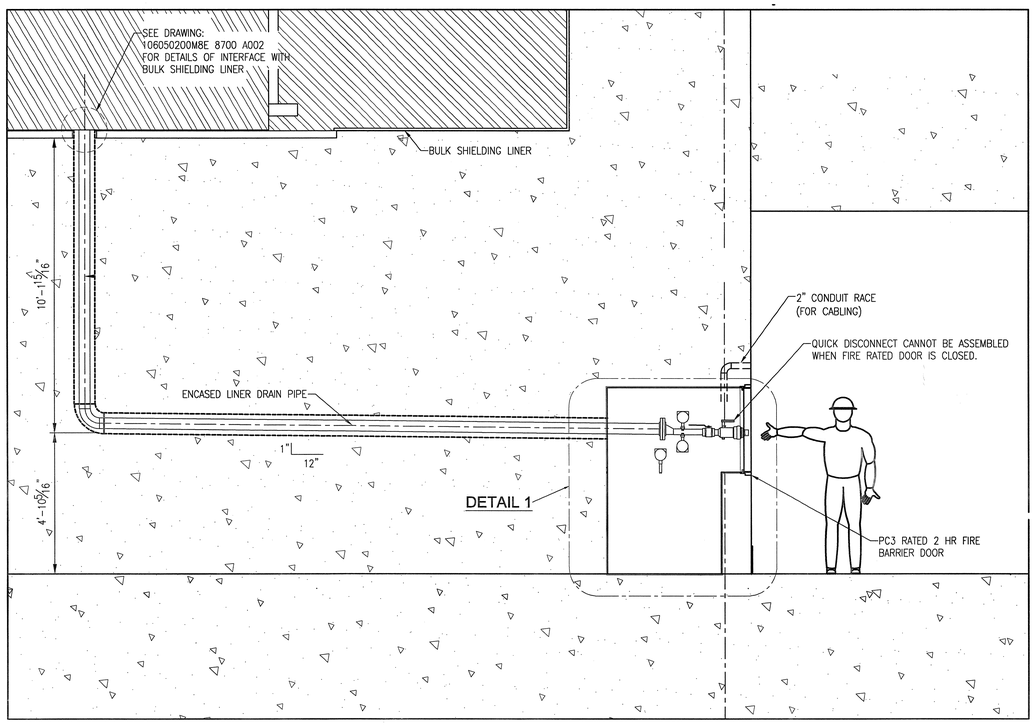

FIGURE 2.4.4-1
BULK SHIELDING LINER DRAIN

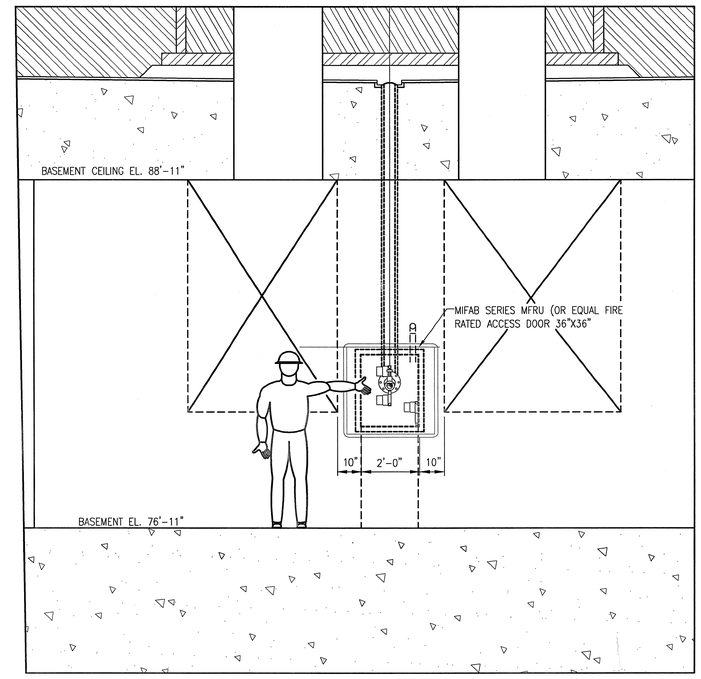

SECTION A W050
SCALE 1/2"=1'-0"

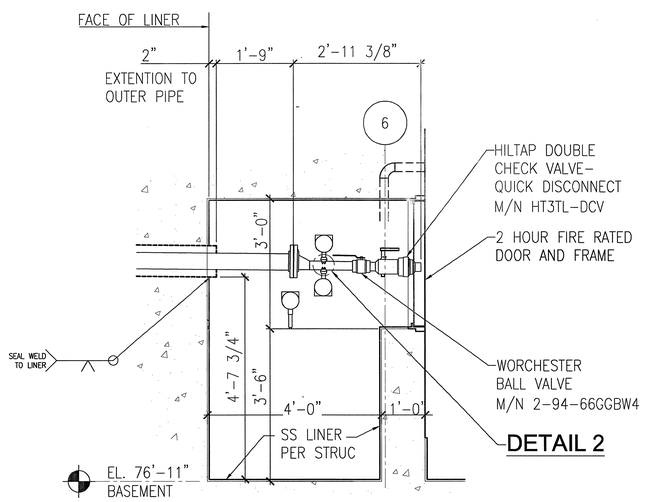

DETAIL 1
SCALE: 3/4"=1'-0"

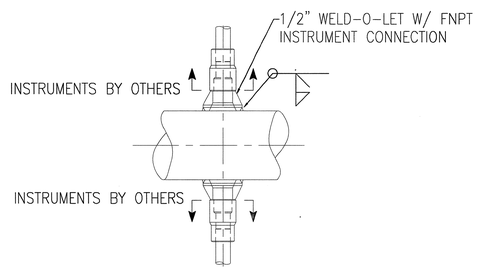

DETAIL 2
SCALE: 6"=1'-0"

NO REPRESENTATION OR WARRANTY, EXPRESSED OR IMPLIED, IS MADE AS TO THE ACCURACY, COMPLETENESS OR USEFULNESS OF THE INFORMATION OR STATEMENTS CONTAINED IN THESE DRAWINGS, OR THAT THE USE OR DISCLOSURE OF ANY INFORMATION, APPARATUS, METHOD, OR PROCESS DISCLOSED IN THESE DRAWINGS MAY NOT INFRINGE PRIVATE RIGHTS OF OTHERS. NO LIABILITY IS ASSUMED WITH RESPECT TO THE USE OF, OR FOR DAMAGES RESULTING FROM THE USE OF ANY INFORMATION, APPARATUS, METHOD, OR PROCESS DISCLOSED IN THESE DRAWINGS. DRAWINGS MADE AVAILABLE FOR INFORMATION TO BIDDER ARE NOT TO BE USED FOR OTHER PURPOSES AND ARE TO BE RETURNED UPON REQUEST OF THE FORWARDING CONTRACTOR.

NUMBER OF SECTION OR DETAIL
DRAWING ON WHICH SECTION OR DETAIL IS SHOWN OR TAKEN
SECTION AND DETAIL KEY

THIS DOCUMENT CONTROLLED BY
CHANGE CONTROL SYSTEM 2
ENGINEERING PROCEDURE SNS-TS-G001

REV	CHANGE TYPE	CHANGE CONTROL SYSTEM	CHANGE REQUEST NUMBER	DESCRIPTION	DSN	CHK	DEPT	DATE	PE	DATE	PJ	DATE	REQ	DATE	UTB	DATE	RPE	RPE NO	DATE	ST	CV	EC	EE	EM	IE	M	PD	SE	AR
0				ISSUED WITH 106060000EQ0002 - CERTIFIED FOR CONSTRUCTION	TP	DH												100946	8/23/01	GPR									MBB

REVISION OR ISSUE PURPOSE — REVISION APPROVALS — SQUAD CHECK

RPE		
DSN	T. PROFFITT	08/23/01
DRW	J.H. TOWNSEND	01/30/01
CHK	D.R. HARDY	08/23/01
DEPT		
PE		
PJ		
LE		8/24/01
REQ		
WBS 1.6.6		8/28/01
WBS 1.6.8		8/28/01
UTB		
REV. 0 DATE	8/23/01	

DRAWING APPROVALS

106060000-J8E-8700-W051

Knight/Jacobs Joint Venture
701 Scarboro Road, MS 8253
Oak Ridge, TN 37830
865-241-9433
fax 865-241-3400

Sverdrup Technology, Inc.
Tullahoma, TN 37388

UT-BATTELLE
Oak Ridge National Laboratory
managed for the DEPARTMENT OF ENERGY under
U.S. GOVERNMENT contract DE-AC05-00OR22725
UT-BATTELLE, LLC. • Oak Ridge, Tennessee

PROJECT NAME:
SPALLATION NEUTRON SOURCE
LOW LEVEL LIQUID WASTE
BULK SHIELDING LINER DRAIN
SECTIONS AND DETAILS

1	48	49	50	PLANT	BLDG	FL	SH.	OF	TYPE	CLASS
3	J	X	X	8	8700		1	1	P	U

51	52	53		
NC	NA		WBS 106060000	J8E8700W051

REV 0

P:\90618\DRAWINGS\MECH\PROC\8700_TARGET\J8E8700W051.DWG 27-AUG-2001 13:56 hardydr