NOTES

1. SEE SPECIFICATION 15455 FOR NITROGEN AND HELIUM COMPONENT AND TUBING INFORMATION.
2. SEE SPECIFICATION 11846 FOR GAS PANEL MOUNTING AND CONSTRUCTION INFORMATION.
3. PANELS TO BE PROVIDED AS GFE AND INSTALLED BY PIPING CONTRACTOR IN ACCORDANCE WITH THE REQUIREMENTS SET FORTH IN SPECIFICATIONS 15455 AND 11846.

4 FROM LWS1 PANEL ON DRAWING J8E8700H110.

5 FROM SERVICE GALLERY GAS PANEL ON DRAWING J8E8700A025.

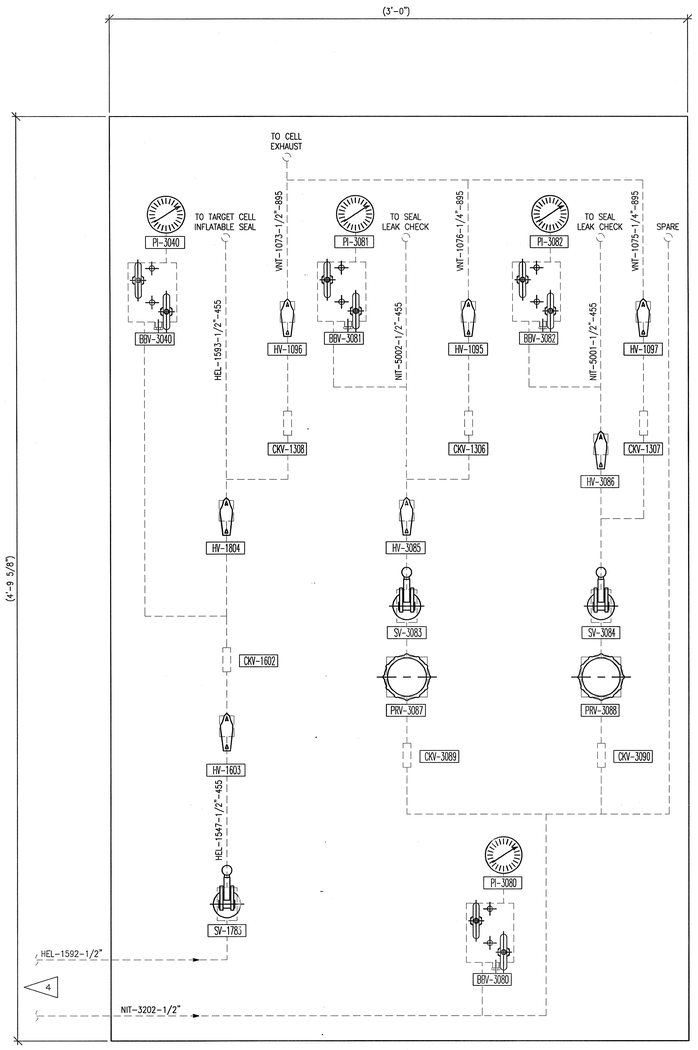

OPERATOR GALLERY GAS PANEL- LOCATED IN MANIPULATOR GALLERY

SCALE: NTS

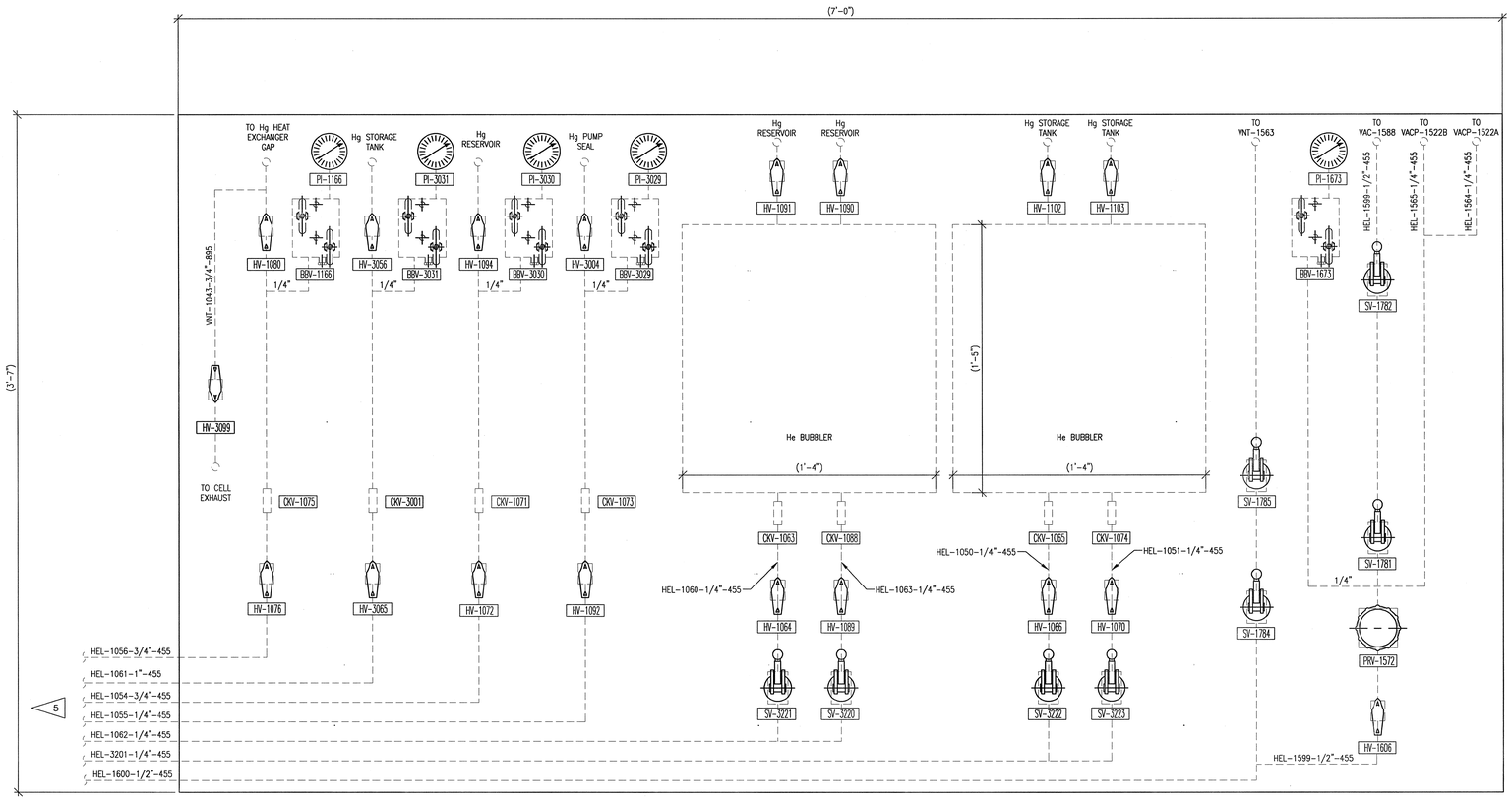

SERVICE GALLERY GAS PANEL - LOCATED IN SERVICE GALLERY

SCALE: NTS

NO REPRESENTATION OR WARRANTY, EXPRESSED OR IMPLIED, IS MADE AS TO THE ACCURACY, COMPLETENESS OR USEFULNESS OF THE INFORMATION OR STATEMENTS CONTAINED IN THESE DRAWINGS, OR THAT THE USE OR DISCLOSURE OF ANY INFORMATION, APPARATUS, METHOD, OR PROCESS DISCLOSED IN THESE DRAWINGS MAY NOT INFRINGE PRIVATE RIGHTS OF OTHERS. NO LIABILITY IS ASSUMED WITH RESPECT TO THE USE OF, OR FOR DAMAGES RESULTING FROM THE USE OF ANY INFORMATION, APPARATUS, METHOD, OR PROCESS DISCLOSED IN THESE DRAWINGS. DRAWINGS MADE AVAILABLE FOR INFORMATION TO BIDDER ARE NOT TO BE USED FOR OTHER PURPOSES AND ARE TO BE RETURNED UPON REQUEST OF THE FORWARDING CONTRACTOR.

NUMBER OF SECTION OR DETAIL — DRAWING ON WHICH SECTION OR DETAIL IS SHOWN OR TAKEN

SECTION AND DETAIL KEY

THIS DOCUMENT CONTROLLED BY

CHANGE CONTROL SYSTEM 3

ENGINEERING PROCEDURE SNS-TS-G001

REV	CHANGE OVER	CHANGE CONTROL SYSTEM	CHANGE REQUEST NUMBER	DESCRIPTION	DSN	CHK	DEPT	DATE	PE	DATE	PJ	DATE	REQ	DATE	UTB	DATE	RPE	RPE NO	DATE	GPR	CV	EC	HG EE	TJ EM	IE	M	PD	SE	MBB AR
0				CERTIFIED FOR CONSTRUCTION - 1/18/02	AF	TJ												100946	1/18/02										

REVISION OR ISSUE PURPOSE — REVISION APPROVALS — SQUAD CHECK

RPE			
DSN	A. FARLESS		5/14/01
DRW	A. FARLESS		5/14/01
CHK	T. JERNIGAN	for TS	1/2/02
DEPT	—		
PE	—		
PJ	—		
REQ	—		
			1/22/02
REV. 0	DATE 1/22/02	UTB	1/22/02

DRAWING APPROVALS

106060000-J8E-8700-H111

Knight/Jacobs Joint Venture
701 Scarboro Road, MS 8253
Oak Ridge, TN 37830
865-241-9433
fax 865-241-3400

Sverdrup Technology, Inc.
Tullahoma, TN 37388

UT-BATTELLE
Oak Ridge National Laboratory
managed for the DEPARTMENT OF ENERGY under U.S. GOVERNMENT contract DE-AC05-00OR22725
UT-BATTELLE, LLC. • Oak Ridge, Tennessee

PROJECT NAME:
SPALLATION NEUTRON SOURCE

SERVICE GALLERY GAS PANEL AND OPERATOR GALLERY GAS PANEL

1	48	49	50	PLANT	BLDG	FL	SH.	OF	TYPE	CLASS
3	J	X	X	3	8700		1	1	P	U
51		52		53	WBS	J8E8700H111				REV
NC		NA			106060000					0

P:\90618\DRAWINGS\ISSUED\MEDIA\8700\1.8\02-01-18 (OFC)\J8E8700H111X3A4BN-2002 19:03 townsejh