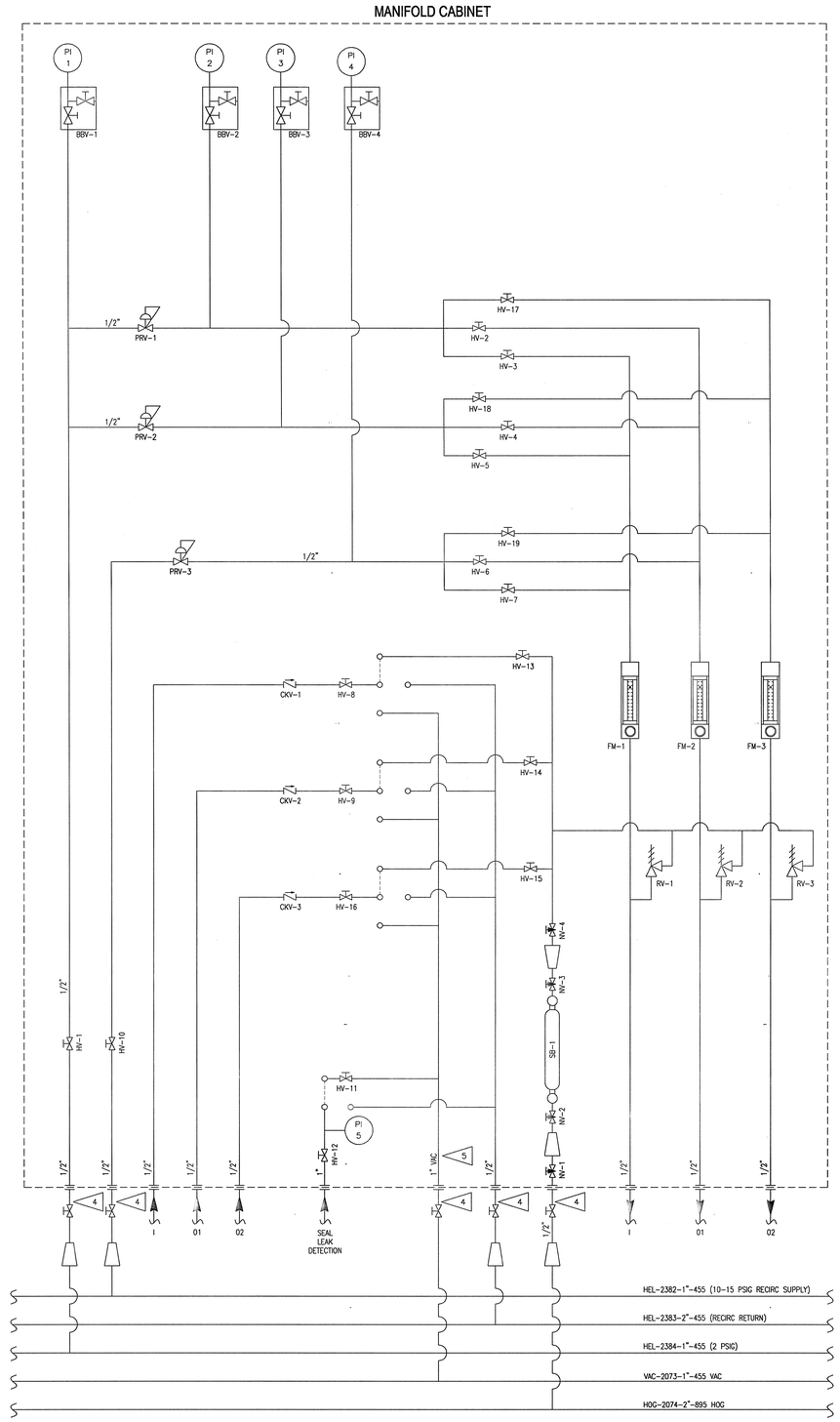

NOTES:

1. SEE SPECIFICATION 15455 FOR ALL PANEL TUBING INFORMATION.
2. PANEL TUBING TO BE 37° FLARE TYPE CONNECTIONS UNLESS OTHERWISE NOTED.
3. COMPONENT CONNECTIONS TO TUBING SHALL BE AS NOTED ON THE EQUIPMENT LIST.
4. SEE PEA DRAWING J8E8700A023, SHEET 2 FOR VALVE IDENTIFICATION NUMBER.
5. VACUUM FITTINGS, VALVES AND COMPONENTS TO BE IN ACCORDANCE WITH THE REQUIREMENTS OF SPECIFICATION 15456.

NO REPRESENTATION OR WARRANTY, EXPRESSED OR IMPLIED, IS MADE AS TO THE ACCURACY, COMPLETENESS OR USEFULNESS OF THE INFORMATION OR STATEMENTS CONTAINED IN THESE DRAWINGS, OR THAT THE USE OR DISCLOSURE OF ANY INFORMATION, APPARATUS, METHOD, OR PROCESS DISCLOSED IN THESE DRAWINGS MAY NOT INFRINGE PRIVATE RIGHTS OF OTHERS. NO LIABILITY IS ASSUMED WITH RESPECT TO THE USE OF, OR FOR DAMAGES RESULTING FROM THE USE OF ANY INFORMATION, APPARATUS, METHOD, OR PROCESS DISCLOSED IN THESE DRAWINGS. DRAWINGS MADE AVAILABLE FOR INFORMATION TO BIDDER ARE NOT TO BE USED FOR OTHER PURPOSES AND ARE TO BE RETURNED UPON REQUEST OF THE FORWARDING CONTRACTOR.

NUMBER OF SECTION OR DETAIL
DRAWING ON WHICH SECTION OR DETAIL IS SHOWN OR TAKEN
SECTION AND DETAIL KEY

THIS DOCUMENT CONTROLLED BY
CHANGE CONTROL SYSTEM 3
ENGINEERING PROCEDURE SNS-TS-G001

REV	CHANGE TYPE	CHANGE CONTROL SYSTEM	CHANGE REQUEST NUMBER	DESCRIPTION	DSN	CHK	DEPT	DATE	PE	DATE	PJ	DATE	REQ	DATE	UTB	DATE	RPE	RPE NO	DATE		ST	CV	EC	EE	EM	IE	M	PD	SE	AR
0				CERTIFIED FOR CONSTRUCTION - 1/18/02	JHT	TJ												100946	1/18/02		GPR			HG	TJ					MBB

REVISION OR ISSUE PURPOSE — REVISION APPROVALS — SQUAD CHECK

RPE		
DSN	J.H. TOWNSEND	9/17/01
DRW	J.J. DAVIDSON	7/16/01
CHK	T. JERNIGAN	1/4/02
DEPT	—	
PE	—	
PJ	—	
REQ	—	
UTB		1/22/02
REV. 0	DATE 1/18/02	

DRAWING APPROVALS

Knight/Jacobs Joint Venture
701 Scarboro Road, MS 8253
Oak Ridge, TN 37830
865-241-9433
fax 865-241-3400

Sverdrup Technology, Inc.
Tullahoma, TN 37388

Oak Ridge National Laboratory
managed for the DEPARTMENT OF ENERGY under U.S. GOVERNMENT contract DE-AC05-00OR22725
UT-BATTELLE, LLC. • Oak Ridge, Tennessee

106060000-J8E-8700-G050

PROJECT NAME:
SPALLATION NEUTRON SOURCE
TARGET UTILITY BUILDING
MULTI-CHANNEL MANIFOLD CABINET
P&ID

1	48	49	50	PLANT	BLDG	FL	SH.	OF	TYPE	CLASS
3	J	X	X	8	8700		1	1	D	U
51		52		53	WBS					REV
NC		NA			106060000	J8E8700G050				0

P:\9061B\DRAWINGS\ISSUED\MECH\8700\1.6\02-01-18 (CFC)\J8E8700CG050DWGN-2002 9:46 townsejh