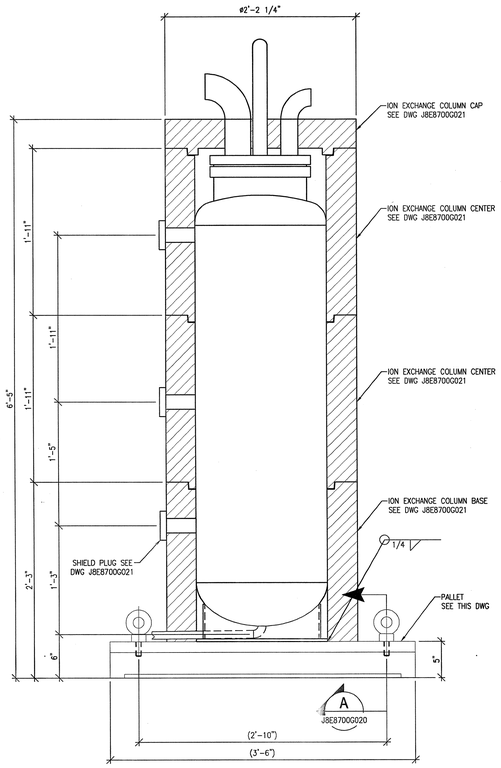

ION EXCHANGE COLUMN ASSEMBLY

SCALE: 1 1/2"=1'-0"

EST. WT.= 6.6 TON

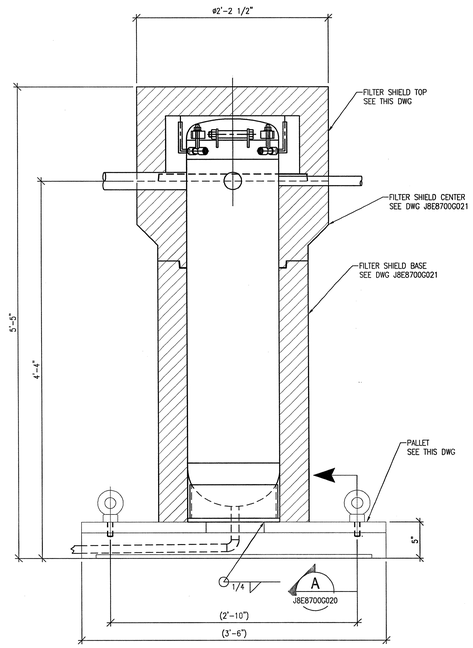

FILTER ASSEMBLY

SCALE: 1 1/2"=1'-0"

EST. WT.= 4.2 TON

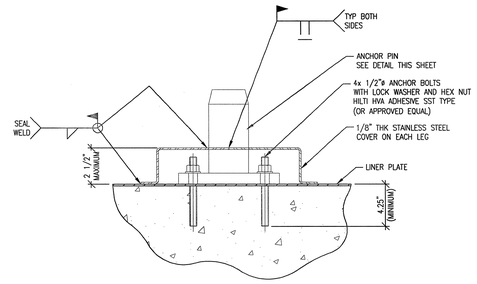

ANCHOR INSTALLATION DETAIL

SCALE: 3"=1'-0"

2 REQUIRED PER PALLET

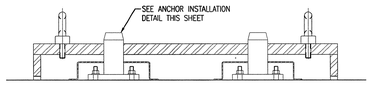

SECTION A

SCALE: 1 1/2"=1'-0"

J8E8700G020

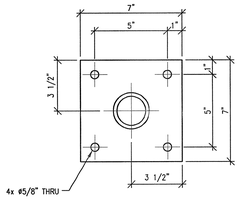

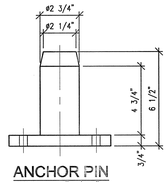

ANCHOR PIN

SCALE: 3"=1'-0"

2 REQUIRED PER PALLET

MATERIAL: 316 STAINLESS STEEL

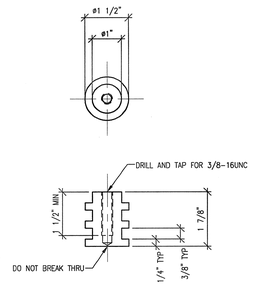

THREAD INSERT

SCALE: 6"=1'-0"

AS REQUIRED

MATERIAL: 316 SST

USE WITH 3/8-16 SHOULDER PATTERN EYE BOLTS

McMASTER CARR #3014T471 OR EQUAL

EYE BOLTS SHALL BE REMOVED AFTER INSTALLATION OF LEAD SECTIONS

GENERAL NOTES

1. SEE EQUIPMENT SPECIFICATION 106060000-EQ-0005 FOR ION EXCHANGE COLUMN INFORMATION.
2. SEE EQUIPMENT SPECIFICATION 106060000-EQ-0006 FOR ACTIVATED COOLING WATER FILTERS INFORMATION.

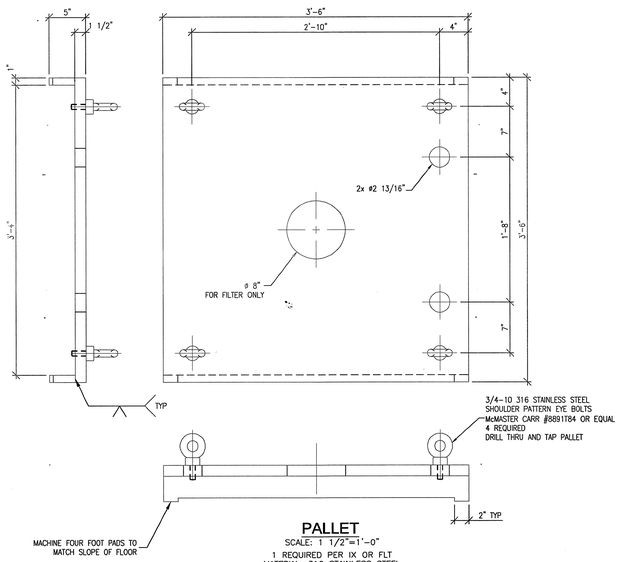

PALLET

SCALE: 1 1/2"=1'-0"

1 REQUIRED PER IX OR FLT

MATERIAL: 316 STAINLESS STEEL

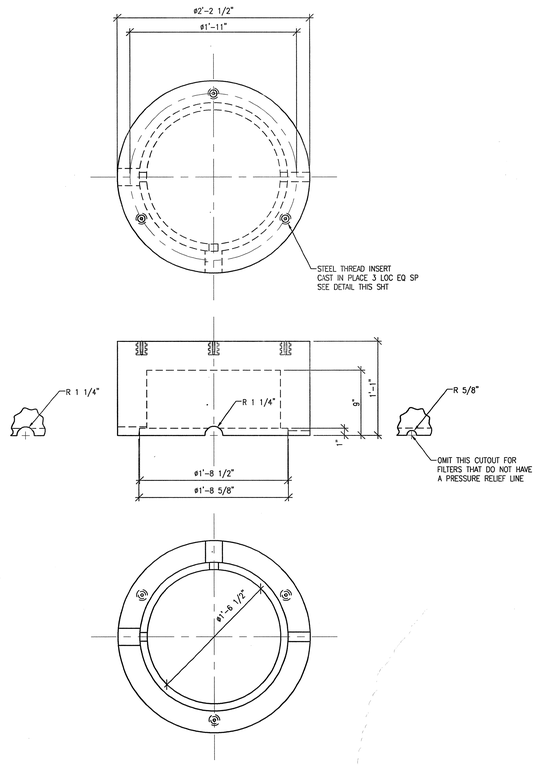

FILTER SHIELD TOP

SCALE: 1 1/2"=1'-0"

1 REQUIRED PER FILTER

MATERIAL: LEAD, PAINTED

1-1/2" = 1'-0" 1' 6" 0 1'

DEVICE DESIGNATOR
SEE DWG J8E8700A001
FOR ABBREVIATION LIST

XX
XXXX

DEVICE NUMBER
(PER P&ID)

NO REPRESENTATION OR WARRANTY, EXPRESSED OR IMPLIED, IS MADE AS TO THE ACCURACY, COMPLETENESS OR USEFULNESS OF THE INFORMATION OR STATEMENTS CONTAINED IN THESE DRAWINGS, OR THAT THE USE OR DISCLOSURE OF ANY INFORMATION, APPARATUS, METHOD, OR PROCESS DISCLOSED IN THESE DRAWINGS MAY NOT INFRINGE PRIVATE RIGHTS OF OTHERS. NO LIABILITY IS ASSUMED WITH RESPECT TO THE USE OF, OR FOR DAMAGES RESULTING FROM THE USE OF ANY INFORMATION, APPARATUS, METHOD, OR PROCESS DISCLOSED IN THESE DRAWINGS. DRAWINGS MADE AVAILABLE FOR INFORMATION TO BIDDER ARE NOT TO BE USED FOR OTHER PURPOSES AND ARE TO BE RETURNED UPON REQUEST OF THE FORWARDING CONTRACTOR.

NUMBER OF SECTION OR DETAIL

DRAWING ON WHICH SECTION OR DETAIL IS SHOWN OR TAKEN

SECTION AND DETAIL KEY

THIS DOCUMENT CONTROLLED BY

CHANGE CONTROL SYSTEM 3

ENGINEERING PROCEDURE SNS-TS-G001

REV	CHANGE TYPE	CHANGE CONTROL SYSTEM	CHANGE REQUEST NUMBER	DESCRIPTION (REVISION OR ISSUE PURPOSE)	DSN	CHK	DEPT	DATE	PE	DATE	PJ	DATE	REQ	DATE	UTB	DATE	RPE	RPE NO	DATE	ST	CV	EC	EE	EM	IE	M	PD	SE	AR
0				CERTIFIED FOR CONSTRUCTION - 1/18/02	JHT	RW												100946	1/18/02	GPR			HG	RW					MBB

REVISION OR ISSUE PURPOSE — REVISION APPROVALS — SQUAD CHECK

RPE: HOUSTON PROFESSIONAL ENGINEER, STATE OF TENNESSEE, 100946, 1/18/02

DSN	J.H. TOWNSEND	9/17/01
DRW	D.R. HARDY	12/16/00
CHK	R. WITHERSPOON	1/7/02
DEPT	—	
PE	—	
PJ	—	
REQ	—	
UTB		1/23/02

REV. 0 DATE 1/23/02

DRAWING APPROVALS

106060000-J8E-8700-G020

Knight/Jacobs
Knight/Jacobs Joint Venture
701 Scarboro Road, MS 8253
Oak Ridge, TN 37830
865-241-9433
fax 865-241-3400

Sverdrup Technology, Inc.
Tullahoma, TN 37388

UT-BATTELLE

Oak Ridge National Laboratory
managed for the DEPARTMENT OF ENERGY under
U.S. GOVERNMENT contract DE-AC05-00OR22725
UT-BATTELLE, LLC. • Oak Ridge, Tennessee

PROJECT NAME:

SPALLATION NEUTRON SOURCE

TARGET & DUMP BUILDINGS
ION EXCHANGE COLUMN & FILTERS
ASSEMBLY & DETAILS

1	48	49	50	PLANT	BLDG	FL	SH.	OF	TYPE	CLASS
3	J	X	X	3	8700		1	1	D	U

51	52	53	WBS		REV
NC	NA		106060000	J8E8700G020	0

P:\9618\DRAWINGS\ISSUED\MECH\8700\1.61\02-01-18 (EFC)\J8E8700G020SNN-2002 9:47 townsejh