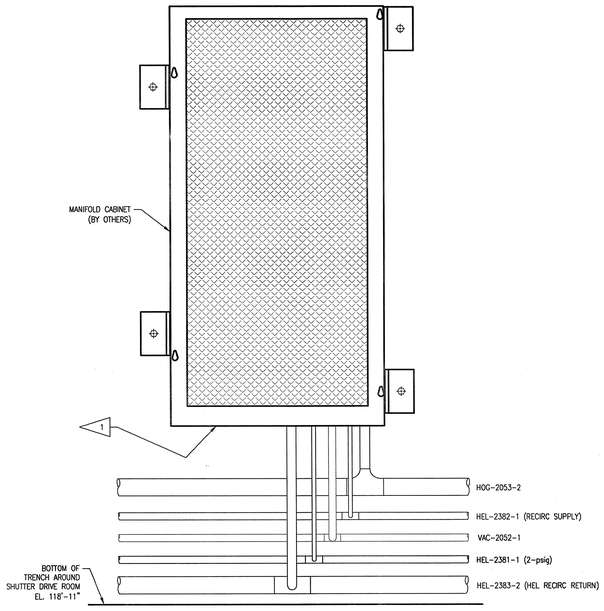

MANIFOLD CABINET DETAIL

SECTION A

SCALE: 1 1/2"=1'-0" J8E8700G011

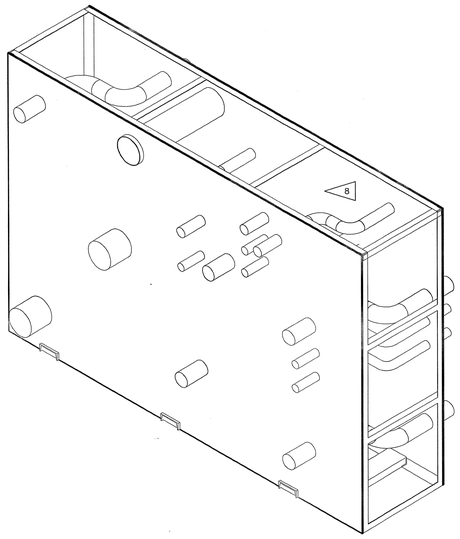

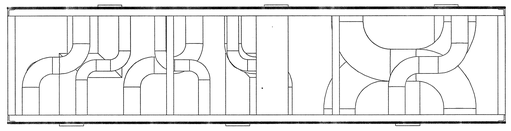

GENERAL NOTES

1. ROUTE 7 LINES TO CORE VESSEL AND SHUTTER INSERTS FOR MULTI CHANNEL CABINET AND 5 LINES FOR SINGLE CHANNEL CABINET. SEE DWG. J8E8700G050 AND J8E8700G053 FOR ADDITIONAL DETAIL.
2. SEE DRAWING J8E8700G004 FOR PENETRATION SLEEVE DETAILS.
3. SEE SPECIFICATION 15130 FOR ACTIVATED COOLING WATER PIPE SYSTEM INSTALLATION, TESTING AND ASSEMBLY REQUIREMENTS.
4. ALL HOG PIPING TO BE INSTALLED, TESTED AND DESIGNED IN ACCORDANCE WITH THE REQUIREMENTS SET FORTH IN SPECIFICATION SECTION 15895
5. ALL HELIUM AND NITROGEN TUBING SHALL COMPLY WITH THE REQUIREMENTS SET FORTH IN SPECIFICATION 15455.
6. NIT-1583-1"-455, NIT-2229-1"-455 & NIT-2604-1"-455 TO PASS THROUGH 6" SLEEVE. TILT WALL TO FILL SLEEVE VOID WITH STEEL SHOT FOR THIS PENETRATION.
7. WELD ANGLE AND PLATE PER THE REQUIREMENTS SET FORTH IN SPECIFICATION 18100A AND 05121.
8. DIVIDER WALL TO BE FILLED WITH HIGH DENSITY CONCRETE PER SPEC 03300 FOLLOWING INSTALLATION.

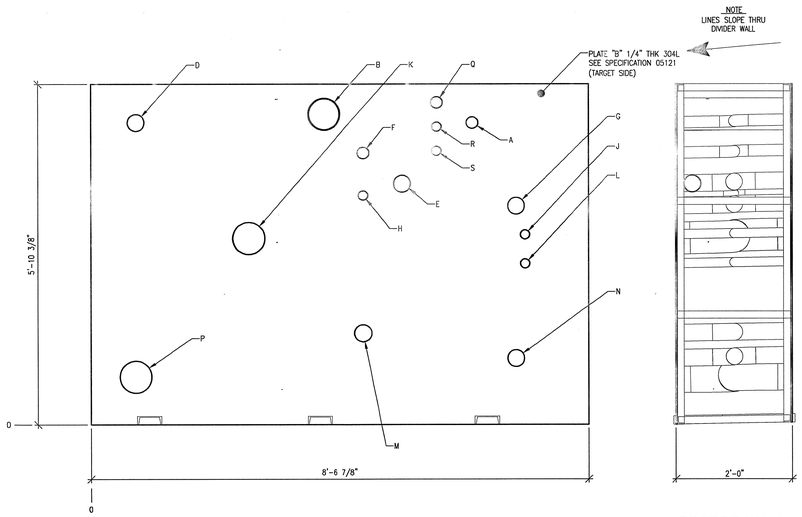

DIVIDER WALL

SCALE: 1"=1'-0"

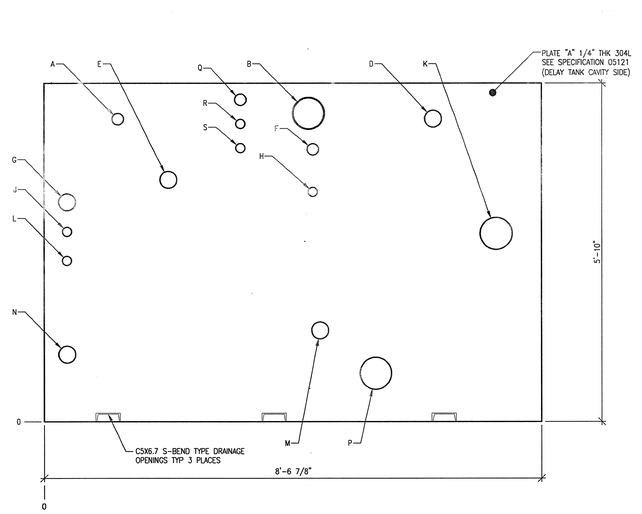

2

HOLE IDENTIFIER	PRIMARY LINE DESIGNATION REFERENCE	SLEEVE SIZE	SLEEVE DETAIL	X & Y COORDINATES CHASE END PLATE "A"		X & Y COORDINATES CHASE END PLATE "B"	
				X	Y	X	Y
A	PRR-1541-2"-130	3" SCH 10s	6	1'-3 1/4"	5'-2 1/2"	6'-6 5/3"	5'-2 3/8"
B	SLEEVE HELIUM/NITROGEN	6" SCH 10s	2 OR 3	5'-3 3/4"	4'-6 5/8"	4'-1/4"	5'-4 1/8"
C	NOT USED	—	—	—	—	—	—
D	PRR-2561-3"-130	4" SCH 10s	6	6'-8 5/8"	5'-2 5/8"	9 3/8"	5'-2 3/8"
E	WLR-1522-3"-130	4" SCH 10s	6	2'-1 3/4"	4'-2"	5'-4 3/8"	4'-1 3/4"
F	PRR-2041-2"-130	3" SCH 10s	6	4'-7 1/2"	4'-8 1/4"	4'-8 3/8"	4'-8 1/8"
G	WLR-2025-3"-130	4" SCH 10s	6	4 3/4"	3'-9 3/8"	7'-3 3/4"	3'-9 1/8"
H	WHR-2549-1 1/2"-130	2 1/2" SCH 10s	6	4'-7 1/2"	3'-11 1/2"	4'-8 3/8"	3'-11 3/8"
J	WLR-1535-1 1/2"-130	2 1/2" SCH 10s	6	4 3/4"	3'-3 1/4"	7'-5 5/8"	3'-3 1/4"
K	WHR-2552-6"-130	8" SCH 10s	6	7'-9 5/8"	3'-2 7/8"	2'-8 5/8"	3'-2 1/2"
L	WLR-2034-1 1/2"-130	2 1/2" SCH 10s	6	4 5/8"	2'-9 1/4"	7'-5 5/8"	2'-9 1/4"
M	WLR-1524-3"-130	4" SCH 10s	6	4'-9"	1'-6 7/8"	4'-8 3/8"	1'-6 7/8"
N	WLR-2026-3"-130	4" SCH 10s	6	4 3/4"	1'-1 7/8"	7'-3 3/4"	1'-1 5/8"
P	WHR-2540-6"-130	8" SCH 10s	6	5'-8 5/8"	10"	9 3/8"	9 3/4"
Q	HOG-2560-2"-895	3" SCH 10s	6	3'-4 5/8"	5'-6 5/8"	5'-11 3/8"	5'-6 5/8"
R	HOG-2040-1 1/2"-895	2 1/2" SCH 10s	6	3'-4 5/8"	5'-1 5/8"	5'-11 3/8"	5'-1 5/8"
S	HOG-1540-1 1/2"-895	2 1/2" SCH 10s	6	3'-4 5/8"	4'-8 5/8"	5'-11 3/8"	4'-8 5/8"

6

3/8" = 1'-0" 2' 1' 0 2' 4' 6'

DEVICE DESIGNATOR
SEE DWG J8E8700A001
FOR ABBREVIATION LIST

XX
XXXX

DEVICE NUMBER
(PER P&ID)

NO REPRESENTATION OR WARRANTY, EXPRESSED OR IMPLIED, IS MADE AS TO THE ACCURACY, COMPLETENESS OR USEFULNESS OF THE INFORMATION OR STATEMENTS CONTAINED IN THESE DRAWINGS, OR THAT THE USE OR DISCLOSURE OF ANY INFORMATION, APPARATUS, METHOD, OR PROCESS DISCLOSED IN THESE DRAWINGS MAY NOT INFRINGE PRIVATE RIGHTS OF OTHERS. NO LIABILITY IS ASSUMED WITH RESPECT TO THE USE OF, OR FOR DAMAGES RESULTING FROM THE USE OF ANY INFORMATION, APPARATUS, METHOD, OR PROCESS DISCLOSED IN THESE DRAWINGS. DRAWINGS MADE AVAILABLE FOR INFORMATION TO BIDDER ARE NOT TO BE USED FOR OTHER PURPOSES AND ARE TO BE RETURNED UPON REQUEST OF THE FORWARDING CONTRACTOR.

NUMBER OF SECTION OR DETAIL

DRAWING ON WHICH SECTION OR DETAIL IS SHOWN OR TAKEN

SECTION AND DETAIL KEY

THIS DOCUMENT CONTROLLED BY

CHANGE CONTROL SYSTEM 3

ENGINEERING PROCEDURE SNS-TS-G001

REV	CHANGE TYPE	CHANGE CONTROL SYSTEM	CHANGE CONTROL NUMBER	DESCRIPTION	DSN	CHK	DEPT	DATE	PE	DATE	PJ	DATE	REQ	DATE	UTB	DATE	RPE	RPE NO	DATE	ST	CV	EC	EE	EM	IE	M	PD	SE	AR
0				CERTIFIED FOR CONSTRUCTION - 1/18/02	JHT	TP											JHT	100946	1/18/02	GPR			HG	TP					MBB

REVISION OR ISSUE PURPOSE — REVISION APPROVALS — SQUAD CHECK

RPE: T. HOUSTON PROFFITT, REGISTERED PROFESSIONAL ENGINEER, STATE OF TENNESSEE, 18108

REV. 0 DATE 1/18/02

DSN	J.H. TOWNSEND	9/17/01
DRW	J.H. TOWNSEND	9/20/01
CHK	T. PROFFITT	1/7/02
DEPT	—	
PE	—	
PJ	—	
REQ	—	
UTB	T. Houston Proffitt	1/22/02

DRAWING APPROVALS

106060000-J8E-8700-G012

Knight/Jacobs
Knight/Jacobs Joint Venture
701 Scarboro Road, MS 8253
Oak Ridge, TN 37830
865-241-9433
fax 865-241-3400

Sverdrup Technology, Inc.
Tullahoma, TN 37388

UT-BATTELLE
Oak Ridge National Laboratory
managed for the DEPARTMENT OF ENERGY under U.S. GOVERNMENT contract DE-AC05-00OR22725
UT-BATTELLE, LLC. • Oak Ridge, Tennessee

PROJECT NAME:
SPALLATION NEUTRON SOURCE
TARGET & DUMP BUILDINGS
OVERALL PIPE ROUTING
SECTION & DETAILS

1	48	49	50	PLANT	BLDG	FL	SH.	OF	TYPE	CLASS
3	J	X	X	8	8700		1	1	D	U
51		52		53	WBS	J8E8700G012				REV
NC		NA			106060000					0

P:\9061B\DRAWINGS\ISSUED\MECH\8700\1.6\02-01-18 (CFC)\J8E8700G012.DWG 1-9-02 9:47 townsejh