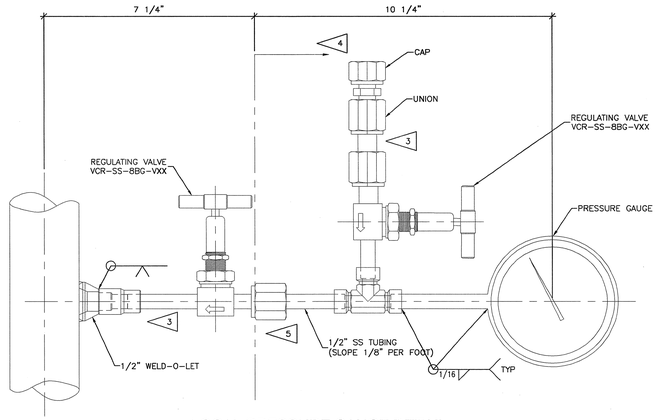

LOCAL PRESSURE GAUGE DETAIL

NTS

-XXX- DENOTES CORRESPONDING INSTRUMENT NUMBER

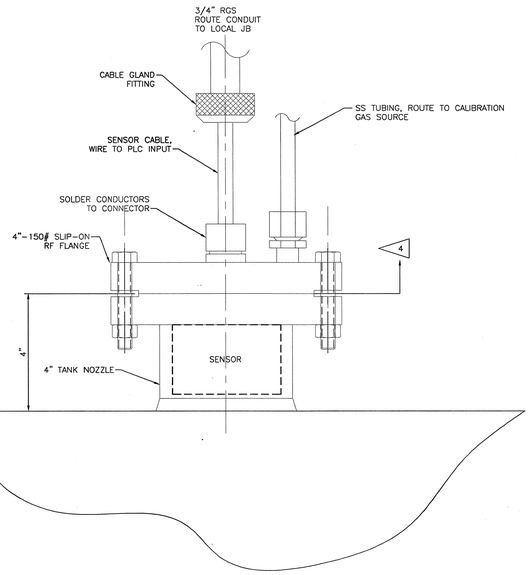

GAS / LIQUID SEPARATOR TANK
H2, O2 GAS ANALYZER ELEMENT

NTS

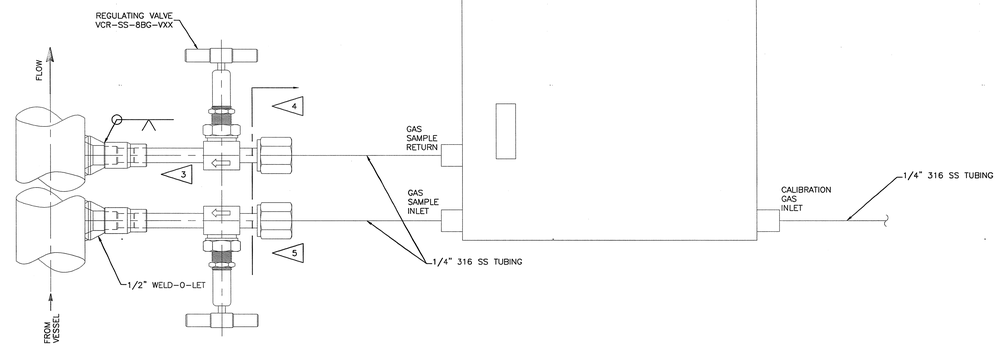

VESSEL GAS ANALYSIS SYSTEM

NTS

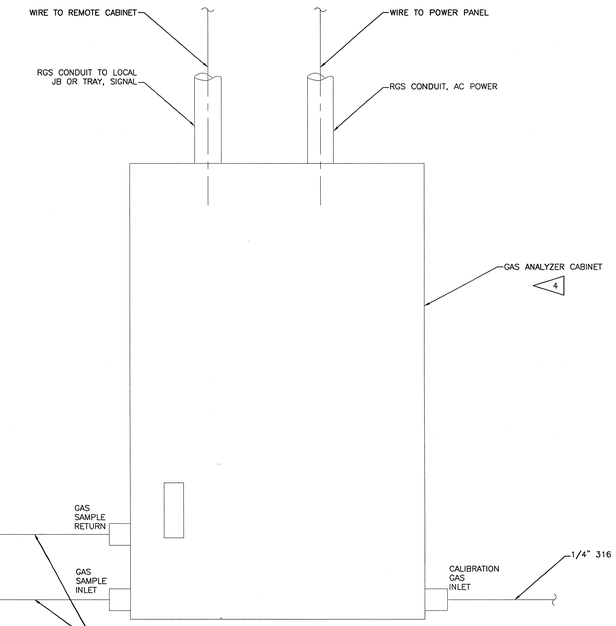

NOTES

1. INSTRUMENTATION CONTRACTOR TO PROVIDE ALL INSTRUMENTS.
2. PIPING CONTRACTOR TO PROVIDE NUTS, BOLTS AND GASKETS FOR INSTRUMENT INSTALLATION.

3 1/2" SS TUBING.
4 PROVIDED AND INSTALLED BY INSTRUMENTATION SUPPLIER.
5 MECHANICAL CONTRACTOR TO PROVIDE MALE END OF VCR CONNECTION.

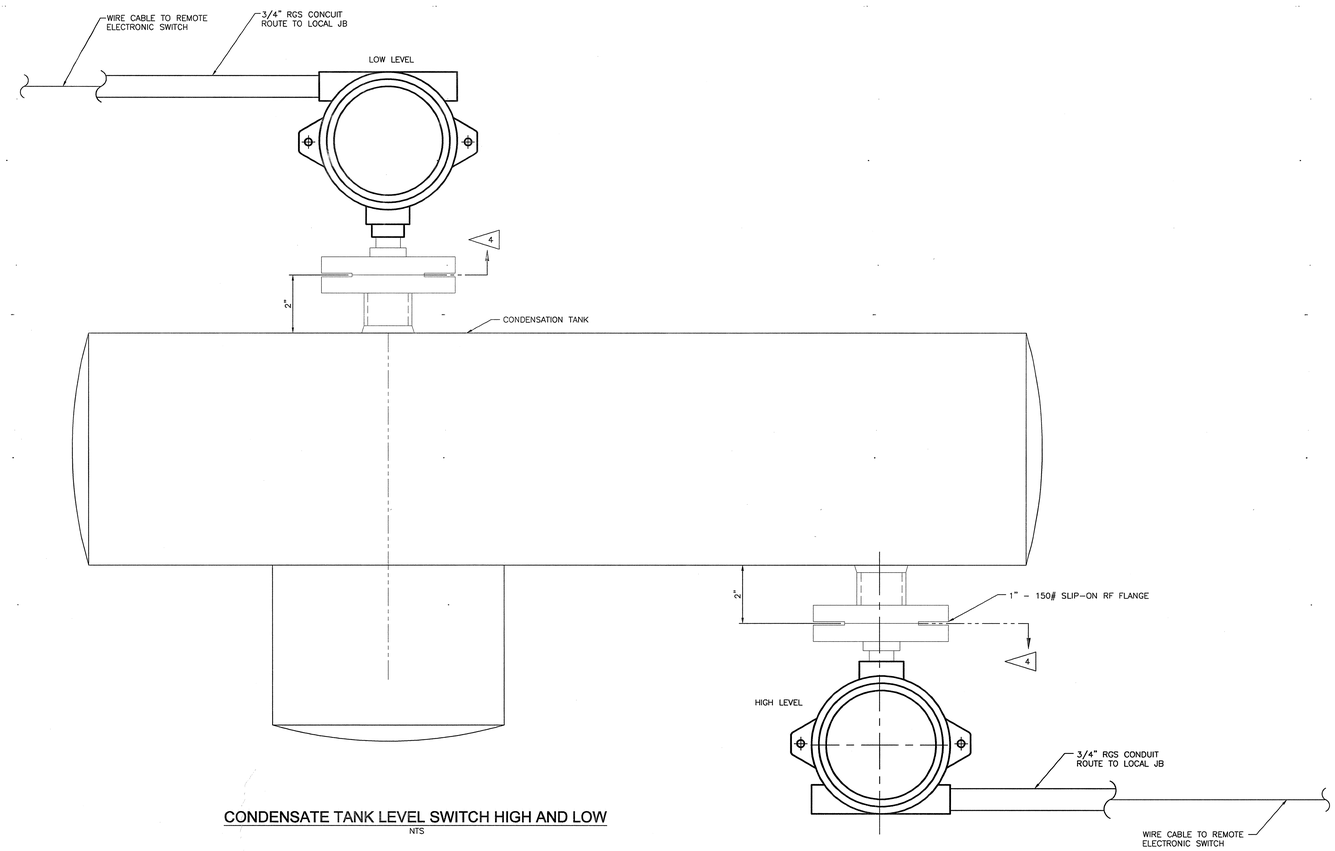

CONDENSATE TANK LEVEL SWITCH HIGH AND LOW

NTS

DEVICE DESIGNATOR
SEE DWG J8E8700A001
FOR ABBREVIATION LIST

XX
XXXX

DEVICE NUMBER
(PER PLID)

NO REPRESENTATION OR WARRANTY, EXPRESSED OR IMPLIED, IS MADE AS TO THE ACCURACY, COMPLETENESS OR USEFULNESS OF THE INFORMATION OR STATEMENTS CONTAINED IN THESE DRAWINGS, OR THAT THE USE OR DISCLOSURE OF ANY INFORMATION, APPARATUS, METHOD, OR PROCESS DISCLOSED IN THESE DRAWINGS MAY NOT INFRINGE PRIVATE RIGHTS OF OTHERS. NO LIABILITY IS ASSUMED WITH RESPECT TO THE USE OF, OR FOR DAMAGES RESULTING FROM THE USE OF ANY INFORMATION, APPARATUS, METHOD, OR PROCESS DISCLOSED IN THESE DRAWINGS. DRAWINGS MADE AVAILABLE FOR INFORMATION TO BIDDER ARE NOT TO BE USED FOR OTHER PURPOSES AND ARE TO BE RETURNED UPON REQUEST OF THE FORWARDING CONTRACTOR.

NUMBER OF SECTION OR DETAIL
DRAWING ON WHICH SECTION OR DETAIL IS SHOWN OR TAKEN
SECTION AND DETAIL KEY

THIS DOCUMENT CONTROLLED BY

CHANGE CONTROL SYSTEM 3

ENGINEERING PROCEDURE SNS-TS-G001

REV	CHANGE ITEM	CHANGE CONTROL SYSTEM	CHANGE REQUEST NUMBER	DESCRIPTION	DSN	CHK	DEPT	DATE	PE	DATE	PJ	DATE	REQ	DATE	UTB	DATE	RPE	RPE NO	DATE		ST	CV	EC	EE	EM	IE	M	PD	SE	AR
0				CERTIFIED FOR CONSTRUCTION - 1/18/02	JHT	JF	—	—	—	—	—	—	—	—	—	—	RMP	100946	1/18/02		GPR	—	—	HG	JF	—	—	—	—	M3B

REVISION OR ISSUE PURPOSE — REVISION APPROVALS — SQUAD CHECK

RPE		
DSN	J.H. TOWNSEND	9/17/01
DRW	J.H. TOWNSEND	9/18/00
CHK	J. FRAZIER	1/8/02
DEPT	—	
PE	—	
PJ	—	
REQ	—	
	Louis J. Jacobs	1/22/02
REV. 0	DATE 1/18/02	
UTB	T. McKenney	1/22/02

DRAWING APPROVALS

108000000-J8E-8700-G007

Knight/Jacobs
Knight/Jacobs Joint Venture
701 Scarboro Road, MS 8253
Oak Ridge, TN 37830
865-241-9433
fax 865-241-3400

Sverdrup Technology, Inc.
Tullahoma, TN 37388

UT-BATTELLE
Oak Ridge National Laboratory
managed for the DEPARTMENT OF ENERGY under
U.S. GOVERNMENT contract DE-AC05-00OR22725
UT-BATTELLE, LLC. ® Oak Ridge, Tennessee

PROJECT NAME:
SPALLATION NEUTRON SOURCE

TARGET & DUMP BUILDINGS
MISC. DETAILS

1	48	49	50	PLANT	BLDG	FL	SH.	OF	TYPE	CLASS
3	J	X	X	8	8700		1	1		U
51		52		53	WBS	J8E8700G007				REV
NC		NA			106060000					0