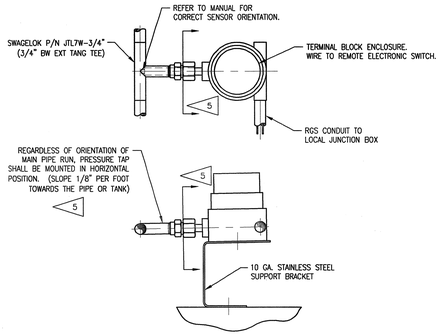

FLOW SWITCH
NTS

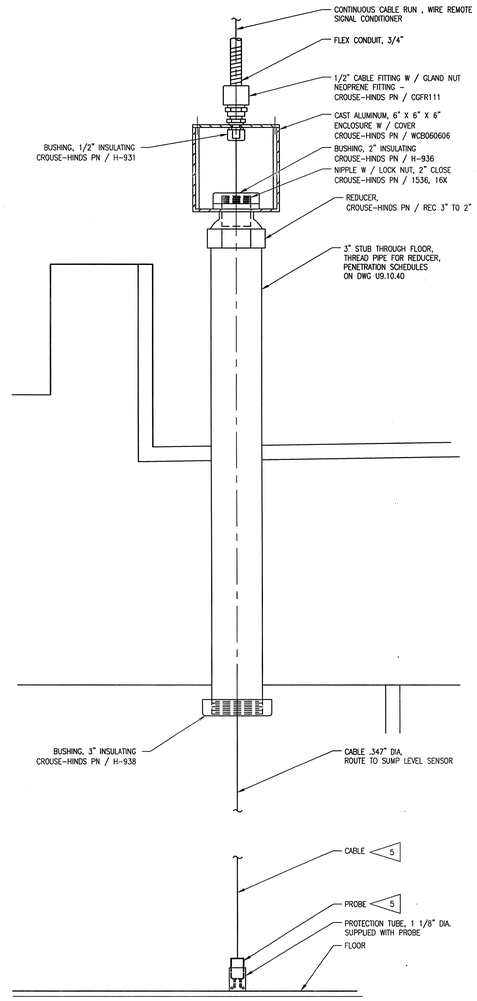

SUMP LEVEL SWITCH ASSEMBLY DETAIL
NTS

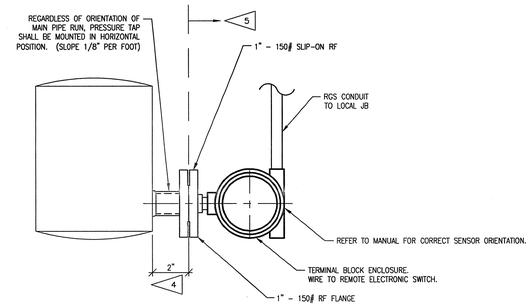

TANK POINT LEVEL
NTS

NOTES

1. INSTRUMENTATION CONTRACTOR TO PROVIDE ALL INSTRUMENTS.
2. PIPING CONTRACTOR TO PROVIDE NUTS, BOLTS AND GASKETS FOR INSTRUMENT INSTALLATION.

3 SUMP SWITCH AND ALL ASSOCIATED HARDWARE, (NUTS, BOLTS AND GASKETS) TO BE PROVIDED AND INSTALLED BY INSTRUMENT CONTRACTOR.

4 GASKET TO BE INCLUDED. GASKET TO BE FLEXITALLIC TYPE 150# CLASS WITH GRAPHITE INSERTS.

5 PROVIDED AND INSTALLED BY INSTRUMENTATION SUPPLIER WITH INSTRUMENT.

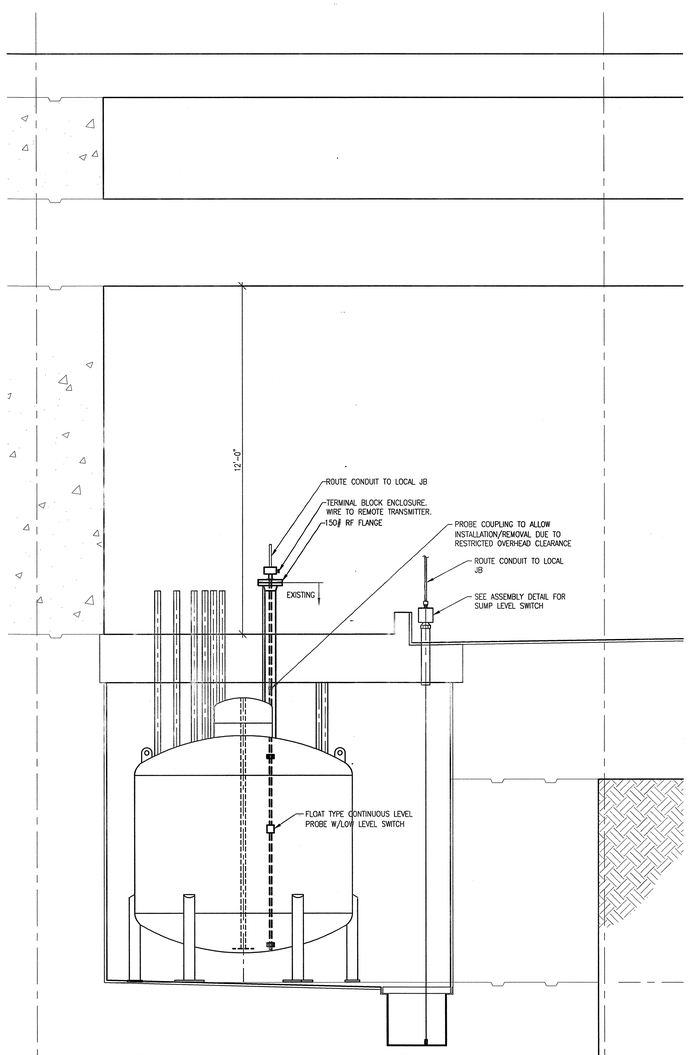

DRAIN TANK LEVEL PROBE & SUMP LEVEL SWITCH
SCALE: 1/2"=1'-0"

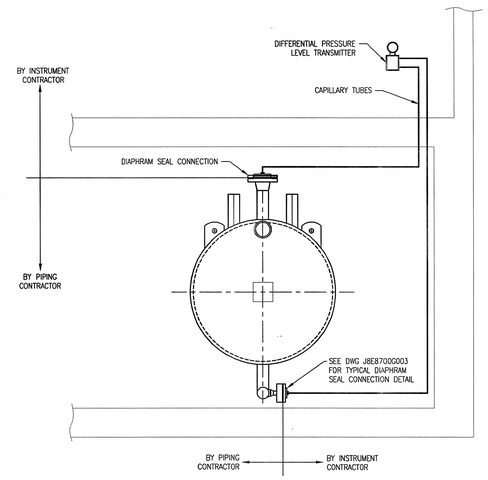

G/L SEPARATOR TANK LEVEL
NTS
(SEP-1020 ONLY)

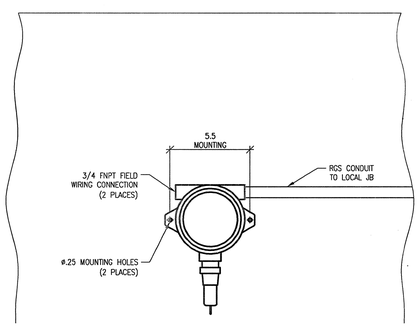

VIEW A-A
SCALE: 3"=1'-0"

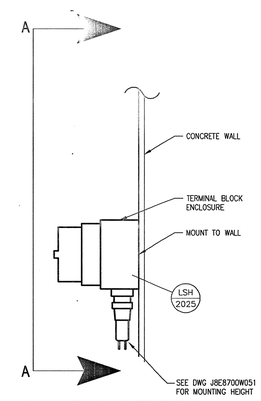

3 BULK SHIELDING LINER DRAIN SUMP LEVEL SWITCH
SCALE: 3"=1'-0"

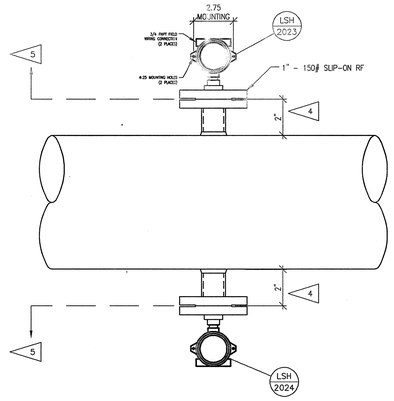

BULK SHIELDING LINER DRAIN LEVEL SWITCH
SCALE: NONE

DEVICE DESIGNATOR SEE DWG J8E8700A001 FOR ABBREVIATION LIST
XX XXXX
DEVICE NUMBER (PER P&ID)

NO REPRESENTATION OR WARRANTY, EXPRESSED OR IMPLIED, IS MADE AS TO THE ACCURACY, COMPLETENESS OR USEFULNESS OF THE INFORMATION OR STATEMENTS CONTAINED IN THESE DRAWINGS, OR THAT THE USE OR DISCLOSURE OF ANY INFORMATION, APPARATUS, METHOD, OR PROCESS DISCLOSED IN THESE DRAWINGS MAY NOT INFRINGE PRIVATE RIGHTS OF OTHERS. NO LIABILITY IS ASSUMED WITH RESPECT TO THE USE OF, OR FOR DAMAGES RESULTING FROM THE USE OF ANY INFORMATION, APPARATUS, METHOD, OR PROCESS DISCLOSED IN THESE DRAWINGS. DRAWINGS MADE AVAILABLE FOR INFORMATION TO BIDDER ARE NOT TO BE USED FOR OTHER PURPOSES AND ARE TO BE RETURNED UPON REQUEST OF THE FORWARDING CONTRACTOR.

NUMBER OF SECTION OR DETAIL
DRAWING ON WHICH SECTION OR DETAIL IS SHOWN OR TAKEN
SECTION AND DETAIL KEY

THIS DOCUMENT CONTROLLED BY
CHANGE CONTROL SYSTEM 3
ENGINEERING PROCEDURE SNS-TS-G001

REV	CHANGE TYPE	CHANGE CONTROL SYSTEM	CHANGE REQUEST NUMBER	DESCRIPTION	DSN	CHK	DEPT	DATE	PE	DATE	PJ	DATE	REQ	DATE	UTB	DATE	RPE	RPE NO	DATE	ST	CV	EC	EE	EM	IE	M	PD	SE	AR
0				CERTIFIED FOR CONSTRUCTION - 1/18/02	JHT	JF	—	—	—	—	—	—	—	—	—	—	JHT	100946	1/18/02	GPR	—	—	HG	JF	—	—	—	—	MBB

REVISION OR ISSUE PURPOSE — REVISION APPROVALS — SQUAD CHECK

RPE

DSN	J.H. TOWNSEND	9/17/01
DRW	A. FARLESS	7/3/01
CHK	J. FRAZIER	1/8/02
DEPT	—	
PE	—	
PJ	—	
REQ	—	1/22/02
UTB		1/22/02

REV. 0 DATE 1/18/02

DRAWING APPROVALS

3" = 1'-0" — SCALE 1/2" = 1'-0"

108000000-J8E-8700-G006

Knight/Jacobs Joint Venture
701 Scarboro Road, MS 8253
Oak Ridge, TN 37830
865-241-9433
fax 865-241-3400

Sverdrup Technology, Inc.
Tullahoma, TN 37388

UT-BATTELLE
Oak Ridge National Laboratory
managed for the DEPARTMENT OF ENERGY under U.S. GOVERNMENT contract DE-AC05-00OR22725
UT-BATTELLE, LLC, ⊕ Oak Ridge, Tennessee

PROJECT NAME:
SPALLATION NEUTRON SOURCE
TARGET & DUMP BUILDINGS
MISC. DETAILS

1	48	49	50	PLANT	BLDG	FL	SH.	OF	TYPE	CLASS
3	J	X	X	8	8700		1	1		U
51		52		53	WBS	J8E8700G003				REV
NC		NA			106060000					0

P:\9061B\DRAWINGS\ISSUED\MECH\8700\1.61\02-01-18 (CFC)\J8E8700C003.DWG 9:48 townsejh