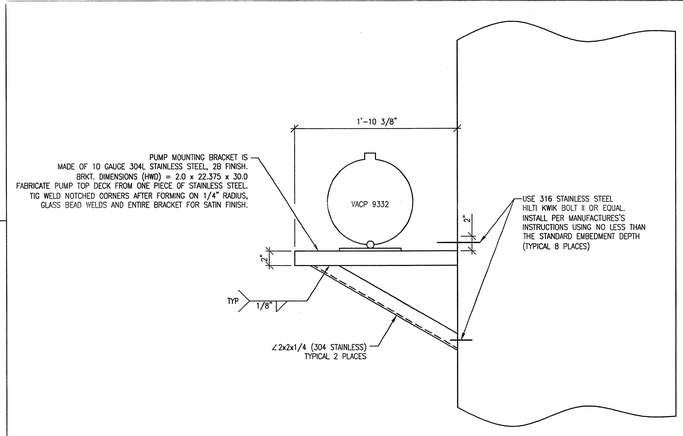

DETAIL 2 (J8E8520V501)

SCALE 1 1/2= 1'-0"

NOTES

1. SEE SPECIFICATION 106060000-EQ-0003 FOR DETAILS ON REMOTE VALVE OPERATIONS.
2. SEE SPECIFICATION 15456 FOR VACUUM PUMP MOUNTING DETAILS. SEE SPECIFICATION 15895 OR 05121 FOR 304 BAR STOCK MATERIAL AND ANGLE TO CONSTRUCT VACUUM PUMP BASE.
3. PROVIDED BY INSTRUMENTATION SUPPLIER.
4. PROVIDED BY INSTRUMENTATION SUPPLIER. MECHANICAL CONTRACTOR TO PROVIDE MALE END OF VCR CONNECTION.
5. TK-1511 MOUNTING DETAIL TO BE PROVIDE LATER.
6. FOOTER DETAIL, BOLT SPACING, AND BOLT SIZE TO BE CONFIRMED BY TANK SUPPLIER FOLLOWING FINAL TANK DESIGN.

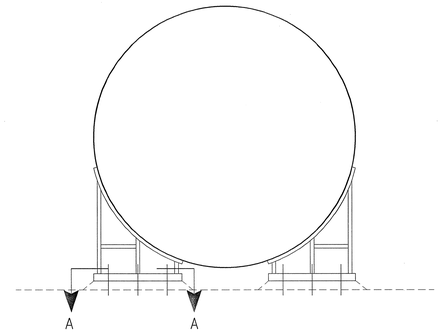

DELAY & GAS LIQUID SEPARATOR TANKS

SCALE: 1 1/2"=1'-0"

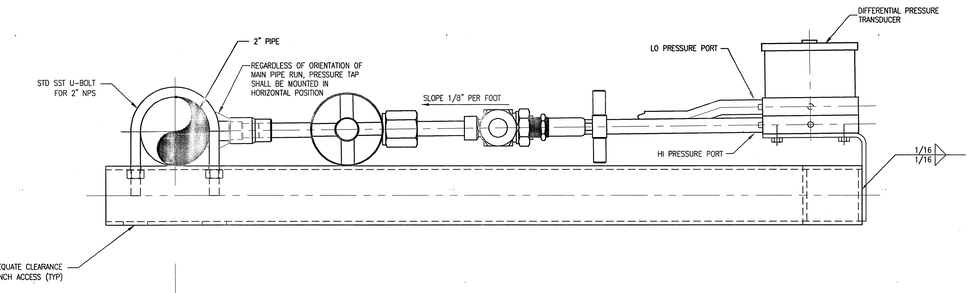

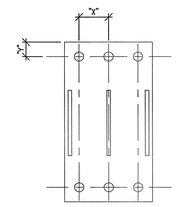

SECTION A-A

SCALE: 1 1/2"=1'-0"

NOTE: SEE TABLE BELOW FOR DIMENSIONS "X" & "Y"

AT FIXED END

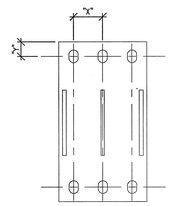

SECTION A-A

SCALE: 1 1/2"=1'-0"

NOTE: SEE TABLE BELOW FOR DIMENSIONS "X" & "Y"

AT SLOTTED END

TANK NUMBER	DIM.-"X" (in.)	DIM.-"Y" (in.)	BOLT QUANTITY	BOLT ø(in.)	BOLT MAT'L.	EMBED DEPTH(in.)
SEP-1020	4	2	16	0.75	A193 GR B8 CLASS 2	N/A
SEP-9300	4	2	24	0.75	DRILLCO MAXI-BOLT OR APPROVED EQUIVALENT	6
SEP-1500	4	2	24	0.75	DRILLCO MAXI-BOLT OR APPROVED EQUIVALENT	9.25
SEP-2000	4	2	24	0.75	DRILLCO MAXI-BOLT OR APPROVED EQUIVALENT	9.25
SEP-2500	4	2	24	0.75	DRILLCO MAXI-BOLT OR APPROVED EQUIVALENT	9.25
TK-1511	N/A	N/A	4	1	A193 GR B8-CLASS 2	N/A
TK-1512	4	2	16	0.75	DRILLCO MAXI-BOLT OR APPROVED EQUIVALENT	9.25
TK-2011	4	2	16	0.75	DRILLCO MAXI-BOLT OR APPROVED EQUIVALENT	9.25
TK-2511	4	2	24	0.75	DRILLCO MAXI-BOLT OR APPROVED EQUIVALENT	9.25

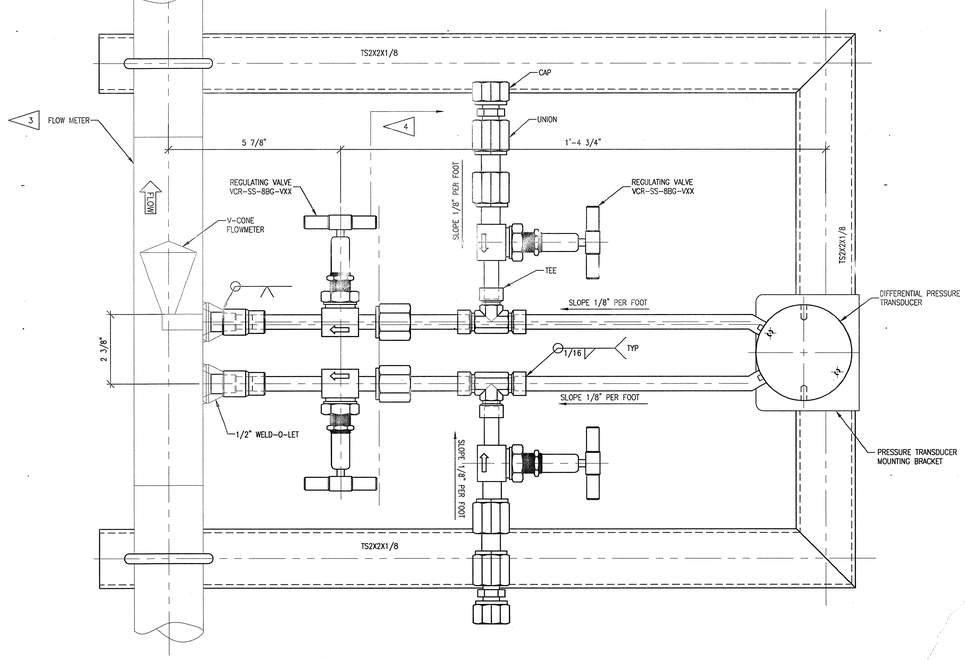

FLOW METER DIFFERENTIAL PRESSURE TRANSDUCER

NTS

TYPICAL FOR LINE SIZES 1 1/2" TO 24"

-XXX- DENOTES CORRESPONDING INSTRUMENT NUMBER

1-1/2" = 1'-0"

DEVICE DESIGNATOR SEE DWG J8E8700A001 FOR ABBREVIATION LIST

XX XXXX

DEVICE NUMBER (PER P&ID)

NO REPRESENTATION OR WARRANTY, EXPRESSED OR IMPLIED, IS MADE AS TO THE ACCURACY, COMPLETENESS OR USEFULNESS OF THE INFORMATION OR STATEMENTS CONTAINED IN THESE DRAWINGS, OR THAT THE USE OR DISCLOSURE OF ANY INFORMATION, APPARATUS, METHOD, OR PROCESS DISCLOSED IN THESE DRAWINGS MAY NOT INFRINGE PRIVATE RIGHTS OF OTHERS. NO LIABILITY IS ASSUMED WITH RESPECT TO THE USE OF, OR FOR DAMAGES RESULTING FROM THE USE OF ANY INFORMATION, APPARATUS, METHOD, OR PROCESS DISCLOSED IN THESE DRAWINGS. DRAWINGS MADE AVAILABLE FOR INFORMATION TO BIDDER ARE NOT TO BE USED FOR OTHER PURPOSES AND ARE TO BE RETURNED UPON REQUEST OF THE FORWARDING CONTRACTOR.

NUMBER OF SECTION OR DETAIL — DRAWING ON WHICH SECTION OR DETAIL IS SHOWN OR TAKEN

SECTION AND DETAIL KEY

THIS DOCUMENT CONTROLLED BY

CHANGE CONTROL SYSTEM 3

ENGINEERING PROCEDURE SNS-TS-G001

REV	CHANGE TYPE	CHANGE CONTROL SYSTEM	CHANGE REQUEST NUMBER	DESCRIPTION	DSN	CHK	DEPT	DATE	PE	DATE	PJ	DATE	REQ	DATE	UTB	DATE	RPE	RPE NO	DATE	ST	CV	EC	EE	EM	IE	M	PD	SE	AR
0				CERTIFIED FOR CONSTRUCTION - 1/18/02	JHT	JF	—	—	—	—	—	—	—	—	—	—	JHT	100946	1/18/02	GPR	—	—	HG	JF	—	—	—	—	MBB

REVISION OR ISSUE PURPOSE — REVISION APPROVALS — SQUAD CHECK

RPE: HOUSTON, STATE OF TENNESSEE, 100946, REGISTERED PROFESSIONAL ENGINEER — REV. 0 DATE 1/18/02

DSN	J.H. TOWNSEND	9/17/01
DRW	D.R. HARDY	11/17/00
CHK	J. FRAZIER	1/8/02
DEPT		
PE		
PJ		
REQ		1/22/02
UTB		1/24/02

DRAWING APPROVALS

108000000-J8E-8700-G005

Knight/Jacobs — Knight/Jacobs Joint Venture, 701 Scarboro Road, MS 8253, Oak Ridge, TN 37830; 865-241-9433, fax 865-241-3400

Sverdrup Technology, Inc. Tullahoma, TN 37388

UT-BATTELLE — Oak Ridge National Laboratory managed for the DEPARTMENT OF ENERGY under U.S. GOVERNMENT contract DE-AC05-00OR22725 UT-BATTELLE, LLC. • Oak Ridge, Tennessee

PROJECT NAME:

SPALLATION NEUTRON SOURCE

TARGET & DUMP BUILDINGS MISC. DETAILS

1	48	49	50	PLANT	BLDG	FL	SH.	OF	TYPE	CLASS
3	J	X	X	8	8700		1	1		U
51		52		53	WBS	J8E8700G005				REV
NC		NA			106060000					0

P:\90618\DRAWINGS\ISSUED\MECH\8700\1.6\02-01-18 (CFC)\J8E8700G005B4MN-2002 08:45 townsejh