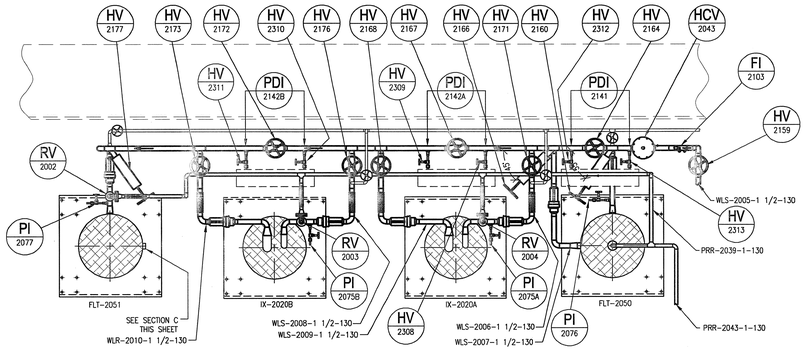

SECTION A
SCALE 1/2"=1'-0" J8E8700C302

SUPPLY AND PRESSURE RELIEF PIPING PLAN

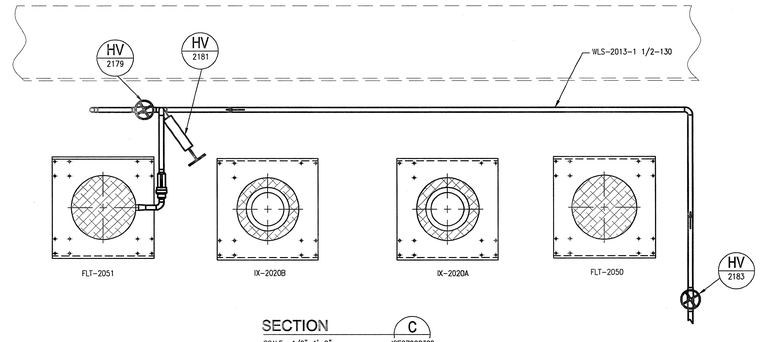

SECTION C
SCALE 1/2"=1'-0" J8E8700C302

RETURN PIPING PLAN

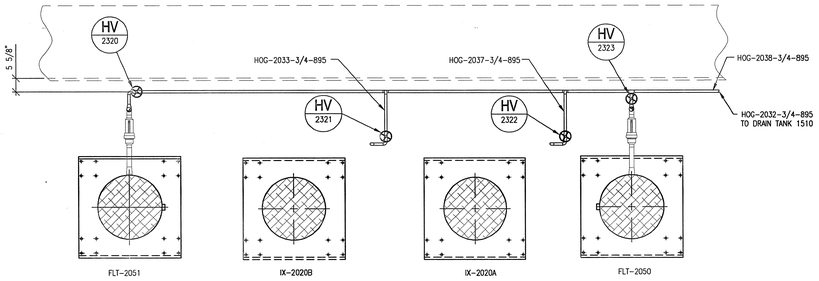

SECTION B
SCALE 1/2"=1'-0" J8E8700C302

HOT OFFGAS PIPING PLAN

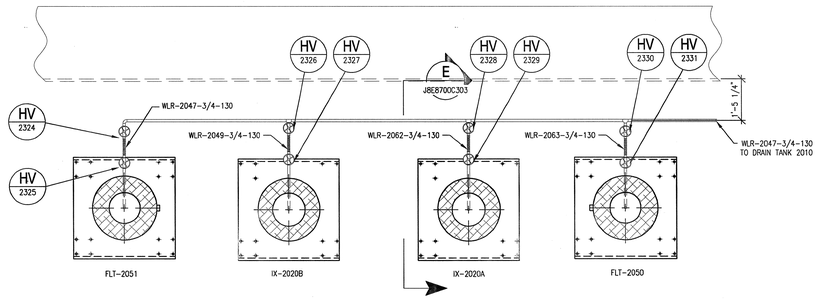

SECTION D
SCALE 1/2"=1'-0" J8E8700C302

ION EXCHANGE COLUMN DRAIN PIPING PLAN

GENERAL NOTES

1. SEE DRAWING J8E8700C003 FOR MOUNTING DETAILS ON:
   a. DRAIN TANK (TK-1510)
   b. CENTRIFUGAL PUMPS (P-1520A & P-1520B)
   c. HEAT EXCHANGER (HX-1530)
2. SEE SPECIFICATION 15130 FOR ACTIVATED COOLING WATER PIPE SYSTEM INSTALLATION, TESTING AND ASSEMBLY REQUIREMENTS.
3. SEE EQUIPMENT SPECIFICATION 106060000-EQ-0003 FOR VALVE INFORMATION.
4. SEE EQUIPMENT SPECIFICATION 106060000-EQ-0007 FOR CIRCULATION PUMP INFORMATION.
5. SEE EQUIPMENT SPECIFICATION 106060000-EQ-0005 FOR ION EXCHANGE COLUMN INFORMATION.
6. SEE EQUIPMENT SPECIFICATION 106060000-EQ-0001 FOR DRAIN TANK INFORMATION.
7. SEE EQUIPMENT SPECIFICATION 106060000-EQ-0008 FOR HEAT EXCHANGER INFORMATION.
8. SEE EQUIPMENT SPECIFICATION 106060000-EQ-0006 FOR ACTIVATED COOLING WATER FILTERS.
9. MINIMUM PIPE SLOPE IS 1/8" PER FT.
10. DIMENSIONS & ELEVATIONS ARE TO CENTERLINE OF PIPE UNLESS OTHERWISE NOTED.
11. SEE DRAWING Nos. J8E8700C080 AND J8E8700C081 FOR PIPE SUPPORT DETAILS.
12. SEE DRAWING No. P3.81.43 FOR OTHER FACILITY PIPING IN THIS AREA.
13. BUILDING BACKGROUND AND PIPE SUPPORTS HAVE BEEN OMITTED FOR CLARITY.

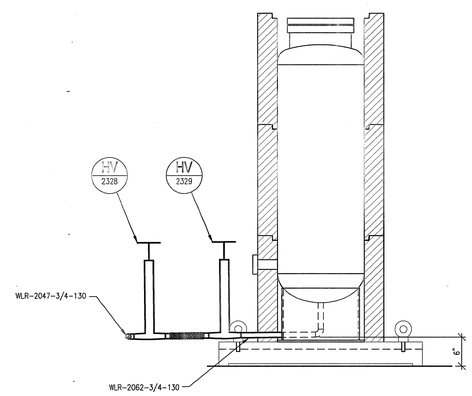

SECTION E
SCALE 1"=1'-0" J8E8700C303

ION EXCHANGE COLUMN 2020A

DEVICE DESIGNATOR SEE DWG J8E8700A001 FOR ABBREVIATION LIST
XX XXXX
DEVICE NUMBER (FOR P&ID)

NO REPRESENTATION OR WARRANTY, EXPRESSED OR IMPLIED, IS MADE AS TO THE ACCURACY, COMPLETENESS OR USEFULNESS OF THE INFORMATION OR STATEMENTS CONTAINED IN THESE DRAWINGS, OR THAT THE USE OR DISCLOSURE OF ANY INFORMATION, APPARATUS, METHOD, OR PROCESS DISCLOSED IN THESE DRAWINGS MAY NOT INFRINGE PRIVATE RIGHTS OF OTHERS. NO LIABILITY IS ASSUMED WITH RESPECT TO THE USE OF, OR FOR DAMAGES RESULTING FROM THE USE OF ANY INFORMATION, APPARATUS, METHOD, OR PROCESS DISCLOSED IN THESE DRAWINGS. DRAWINGS MADE AVAILABLE FOR INFORMATION TO BIDDER ARE NOT TO BE USED FOR OTHER PURPOSES AND ARE TO BE RETURNED UPON REQUEST OF THE FORWARDING CONTRACTOR.

NUMBER OF SECTION OR DETAIL
DRAWING ON WHICH SECTION OR DETAIL IS SHOWN OR TAKEN
SECTION AND DETAIL KEY

THIS DOCUMENT CONTROLLED BY
CHANGE CONTROL SYSTEM 3
ENGINEERING PROCEDURE SNS-TS-0201

REV	CHANGE TYPE	CHANGE CONTROL SYSTEM	CHANGE REQUEST NUMBER	DESCRIPTION	DSN	CHK	DEPT	DATE	PE	DATE	PJ	DATE	REQ	DATE	UTB	DATE	RPE	RPE NO	DATE	ST	CV	EC	EE	EM	IE	M	PD	SE	AR
0				CERTIFIED FOR CONSTRUCTION - 1/18/02	JJD	TP												100946	1/18/02	GPR			HG	TP					MBB

REVISION OR ISSUE PURPOSE — REVISION APPROVALS — SQUAD CHECK

RPE — REV. 0 DATE 1/18/02

DRAWING APPROVALS		
DSN	J.J. DAVIDSON	12/21/01
DRW.	J.J. DAVIDSON	12/21/01
CHK	T. PROFFITT	1/14/02
DEPT	—	
PE	—	
PJ	—	
REQ	—	
		1/14/02
UTB		1/14/02

SCALE 1/2" = 1'-0"

Knight/Jacobs Joint Venture
701 Scarboro Road, MS 8253
Oak Ridge, TN 37830
865-241-9433
fax 865-241-3400

Sverdrup Technology, Inc.
Tullahoma, TN 37388

UT-BATTELLE
Oak Ridge National Laboratory
managed for the DEPARTMENT OF ENERGY under U.S. GOVERNMENT contract DE-AC05-000R22725
UT-BATTELLE, LLC. ⊕ Oak Ridge, Tennessee

106060000-J8E-8700-C303

PROJECT NAME:
SPALLATION NEUTRON SOURCE
ACTIVATED COOLING WATER SYSTEM
LIGHT WATER STATION #3
SECTIONS & DETAILS

1	48	49	50	PLANT	BLDG	FL	SH.	OF	TYPE	CLASS
3	J	X	X	8	8700		1	1	D	U
51	52	53		WBS						REV
NC	NA			106060000	J8E8700C303					0

P:\8018\DRAWINGS\ISSUED\MECH\8700\1.6\02-01-18 (OFC)\J8E8700C303SWN-2002 11:05 townsejh