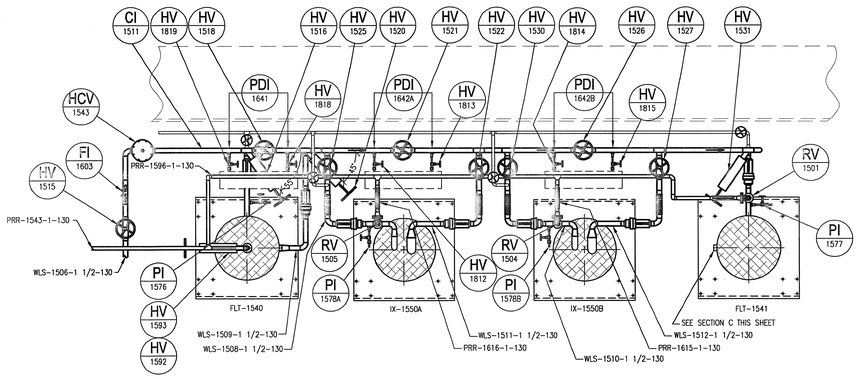

SECTION A
SCALE 1/2"=1'-0" J8E8700C202

SUPPLY AND PRESSURE RELIEF PIPING PLAN

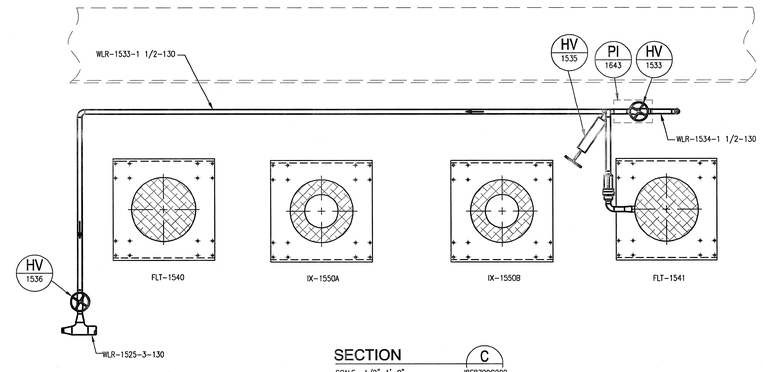

SECTION C
SCALE 1/2"=1'-0" J8E8700C202

RETURN PIPING PLAN

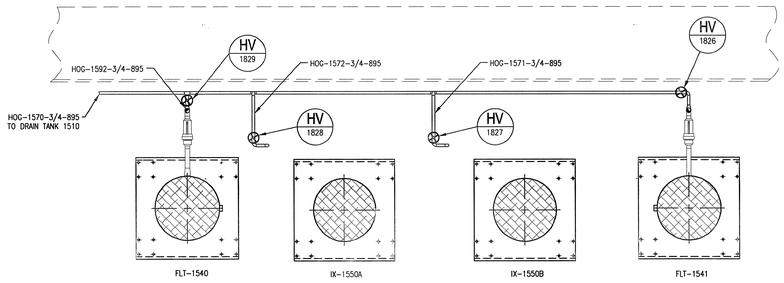

SECTION B
SCALE 1/2"=1'-0" J8E8700C202

HOT OFFGAS PIPING PLAN

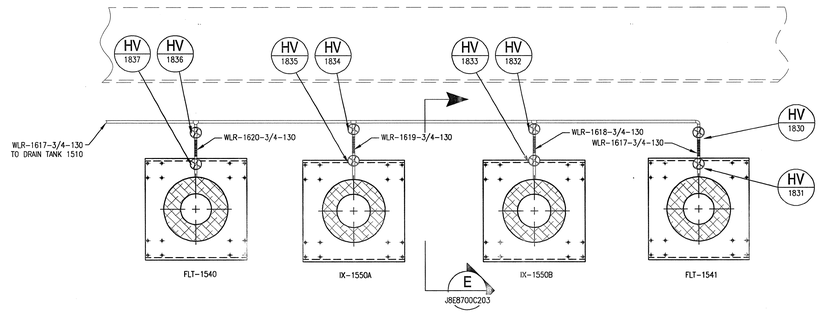

SECTION D
SCALE 1/2"=1'-0" J8E8700C202

FILTER / ION EXCHANGE COLUMN DRAIN PIPING PLAN

GENERAL NOTES

1. SEE DRAWING J8E8700G020 AND J8E8700G021 FOR MOUNTING DETAILS ON IX COLUMNS AND FILTERS.
2. SEE SPECIFICATION 15130 FOR ACTIVATED COOLING WATER PIPE SYSTEM INSTALLATION, TESTING AND ASSEMBLY REQUIREMENTS.
3. SEE EQUIPMENT SPECIFICATION 106060000-EQ-0003 FOR VALVE INFORMATION.
4. SEE EQUIPMENT SPECIFICATION 106060000-EQ-0005 FOR ION EXCHANGE COLUMN INFORMATION.
5. SEE EQUIPMENT SPECIFICATION 106060000-EQ-0006 FOR ACTIVATED COOLING WATER FILTERS.
6. MINIMUM PIPE SLOPE IS 1/8" PER FT.
7. DIMENSIONS & ELEVATIONS ARE TO CENTERLINE OF PIPE UNLESS OTHERWISE NOTED.
8. SEE DRAWING Nos. J8E8700G080 AND J8E8700G081 FOR PIPE SUPPORT DETAILS.
9. PIPE SUPPORTS HAVE BEEN OMITTED FOR CLARITY.

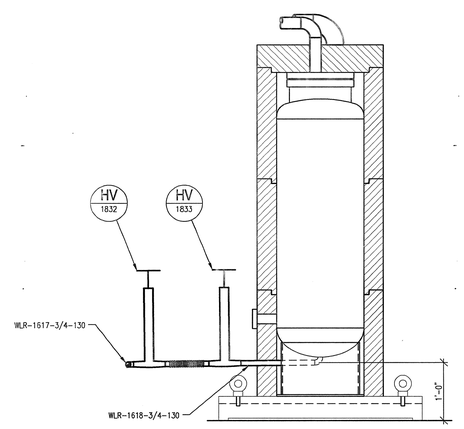

SECTION E
SCALE 1"=1'-0" J8E8700C203

ION EXCHANGE COLUMN 1550B

FLT-1540, FLT-1541, AND IX-1550A&B ENTIRELY SIMILAR

DEVICE DESIGNATOR SEE DWG J8E8700A001 FOR ABBREVIATION LIST
XX
XXXX
DEVICE NUMBER (PER P&ID)

NO REPRESENTATION OR WARRANTY, EXPRESSED OR IMPLIED, IS MADE AS TO THE ACCURACY, COMPLETENESS OR USEFULNESS OF THE INFORMATION OR STATEMENTS CONTAINED IN THESE DRAWINGS, OR THAT THE USE OR DISCLOSURE OF ANY INFORMATION, APPARATUS, METHOD, OR PROCESS DISCLOSED IN THESE DRAWINGS MAY NOT INFRINGE PRIVATE RIGHTS OF OTHERS. NO LIABILITY IS ASSUMED WITH RESPECT TO THE USE OF, OR FOR DAMAGES RESULTING FROM THE USE OF ANY INFORMATION, APPARATUS, METHOD, OR PROCESS DISCLOSED IN THESE DRAWINGS. DRAWINGS MADE AVAILABLE FOR INFORMATION TO BIDDER ARE NOT TO BE USED FOR OTHER PURPOSES AND ARE TO BE RETURNED UPON REQUEST OF THE FORWARDING CONTRACTOR.

NUMBER OF SECTION OR DETAIL
DRAWING ON WHICH SECTION OR DETAIL IS SHOWN OR TAKEN
SECTION AND DETAIL KEY

THIS DOCUMENT CONTROLLED BY
CHANGE CONTROL SYSTEM 3
ENGINEERING PROCEDURE SNS-TS-G001

REV	CHANGE TYPE	CHANGE CONTROL SYSTEM	CHANGE REQUEST NUMBER	DESCRIPTION (REVISION OR ISSUE PURPOSE)	DSN	CHK	DEPT	DATE	PE	DATE	PJ	DATE	REQ	DATE	UTB	DATE	RPE	RPE NO	DATE	GPR	CV	EC	HG EE	PW EM	IE	M	PD	SE	WBB AR
0				CERTIFIED FOR CONSTRUCTION - 1/18/02	JJD	PW												100946	1/18/02										WBB

RPE: HOUSTON, TEXAS, STATE OF TENNESSEE, REGISTERED PROFESSIONAL ENGINEER — 1/18/02

DSN	J.J. DAVIDSON	12/21/01
DRW	J.J. DAVIDSON	12/21/01
CHK	P. WALLER	1/11/02
DEPT	—	
PE	—	
PJ	—	
REQ	—	1/22/02
UTB		1/22/02

REV. 0 DATE 1/18/02

SCALE 1/2" = 1'-0"

Knight/Jacobs Joint Venture
701 Scarboro Road, MS 8253
Oak Ridge, TN 37830
865-241-9433
fax 865-241-3400

Sverdrup Technology, Inc.
Tullahoma, TN 37388

UT-BATTELLE
Oak Ridge National Laboratory
managed for the DEPARTMENT OF ENERGY under U.S. GOVERNMENT contract DE-AC05-00OR22725
UT-BATTELLE, LLC. ◆ Oak Ridge, Tennessee

PROJECT NAME:
SPALLATION NEUTRON SOURCE
ACTIVATED COOLING WATER SYSTEM
LIGHT WATER STATION #2
SECTIONS & DETAILS

1	48	49	50	PLANT	BLDG	FL	SH.	OF	TYPE	CLASS
3	J	X	X	8	3700		1	1	D	U
51		52		53	WBS					REV
NC		NA			106060000		J8E8700C203			0

106060000-J8E-8700-C203

P:\9G618\DRAWINGS\ISSUED\MDG\J8700\1.6\02-01-18 (CFC)\J8E8700C203SWBN-2002 10:57 townsejh