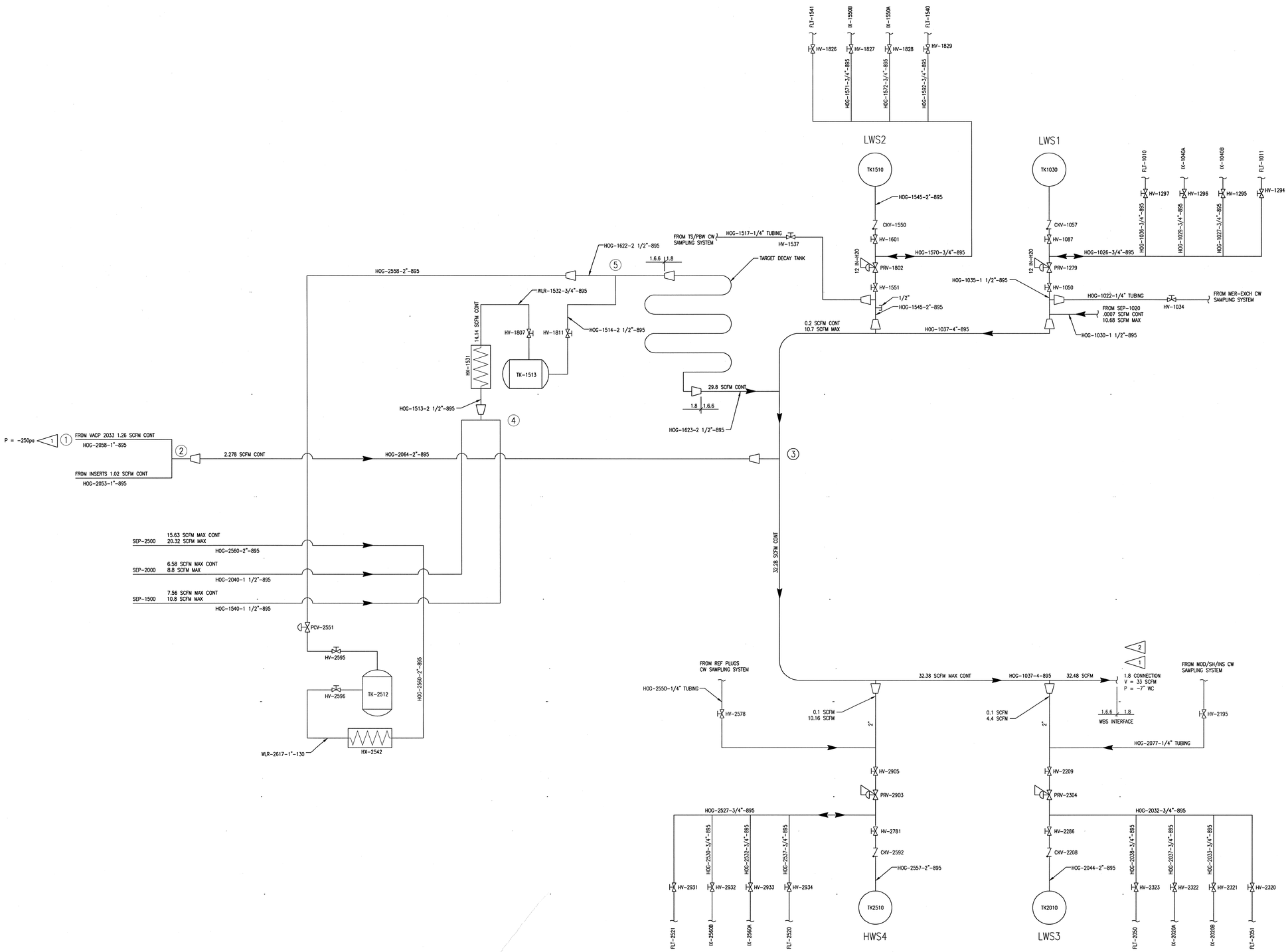

NOTES

1. PRESSURE IS INDICATED IN GAUGE PRESSURE.
2. ACTUAL CONTINUOUS FLOW RATE MAY VARY. FLOW RATE DURING DRAIN DOWN OR PUMP UP WILL BE LESS.
3. ALL HOG PIPING TO BE INSTALLED, TESTED AND DESIGNED IN ACCORDANCE WITH THE REQUIREMENTS SET FORTH IN SPECIFICATION SECTION 15895
4. MANUAL (HV) AND ON/OFF (SV) HOG SYSTEM BALL VALVES SHALL BE TYPE V-6175, CHECK VALVES TO BE TYPE V-1376 AS IDENTIFIED IN SPECIFICATION 15100 UNLESS OTHERWISE NOTED.
5. PRV VALVE TO BE APCO M/N 1108-1NPM WITH NPT THREAD CONNECTIONS OR APPROVED EQUAL.

106060000-J8E-8700-A030

Knight/Jacobs Joint Venture
701 Scarboro Road, MS 8253
Oak Ridge, TN 37830
865-241-9433
fax 865-241-3400

Sverdrup Technology, Inc.
Tullahoma, TN 37388

UT-BATTELLE
Oak Ridge National Laboratory
managed for the DEPARTMENT OF ENERGY under U.S. GOVERNMENT contract DE-AC05-00OR22725
UT-BATTELLE, LLC. © Oak Ridge, Tennessee

PROJECT NAME:
SPALLATION NEUTRON SOURCE

PCE & HOG SYSTEMS
FLOW SCHEMATIC

DRAWING APPROVALS		
DSN	G. TENNYSON	5/21/01
DRW	L. LOPEZ	9/20/01
CHK	T. JERNIGAN	1/7/02
DEPT		
PE		
PJ		
REQ		
UTB		

RPE: HOUSTON, TEXAS — STATE OF TENNESSEE — 100946 — 1/18/02
REV. 0 DATE 1/18/02

1	48	49	50	PLANT	BLDG	FL	SH.	OF	TYPE	CLASS
3	J	X	X	8	8700		1	1	D	U
51		52		53	WBS 106060000	J8E8700A030				REV 0
NC		NA								

REV	CHANGE CODE	CHANGE CONTROL SYSTEM	CHANGE REQUEST NUMBER	DESCRIPTION	DSN	CHK	DEPT	DATE	PE	DATE	PJ	DATE	REQ	DATE	UTB	DATE	RPE	RPE NO	DATE	ST	CV	EC	EE	EM	IE	M	PD	SE	AR
0				CERTIFIED FOR CONSTRUCTION - 1/18/02	AF	TJ												100946	1/18/02	GPR			HG	TJ					MBB

REVISION OR ISSUE PURPOSE — REVISION APPROVALS — SQUAD CHECK

NO REPRESENTATION OR WARRANTY, EXPRESSED OR IMPLIED, IS MADE AS TO THE ACCURACY, COMPLETENESS OR USEFULNESS OF THE INFORMATION OR STATEMENTS CONTAINED IN THESE DRAWINGS, OR THAT THE USE OR DISCLOSURE OF ANY INFORMATION, APPARATUS, METHOD, OR PROCESS DISCLOSED IN THESE DRAWINGS MAY NOT INFRINGE PRIVATE RIGHTS OF OTHERS. NO LIABILITY IS ASSUMED WITH RESPECT TO THE USE OF, OR FOR DAMAGES RESULTING FROM THE USE OF ANY INFORMATION, APPARATUS, METHOD, OR PROCESS DISCLOSED IN THESE DRAWINGS. DRAWINGS MADE AVAILABLE FOR INFORMATION TO BIDDER ARE NOT TO BE USED FOR OTHER PURPOSES AND ARE TO BE RETURNED UPON REQUEST OF THE FORWARDING CONTRACTOR.

NUMBER OF SECTION OR DETAIL
DRAWING ON WHICH SECTION OR DETAIL IS SHOWN OR TAKEN
SECTION AND DETAIL KEY

THIS DOCUMENT CONTROLLED BY
CHANGE CONTROL SYSTEM 3
ENGINEERING PROCEDURE SNS-TS-G001

P:\90618\DRAWINGS\ISSUED\MECH\8700\1.6\02-01-18 (CFC)\J8E8700A030E48N-2002 10:34 tjsmesejh