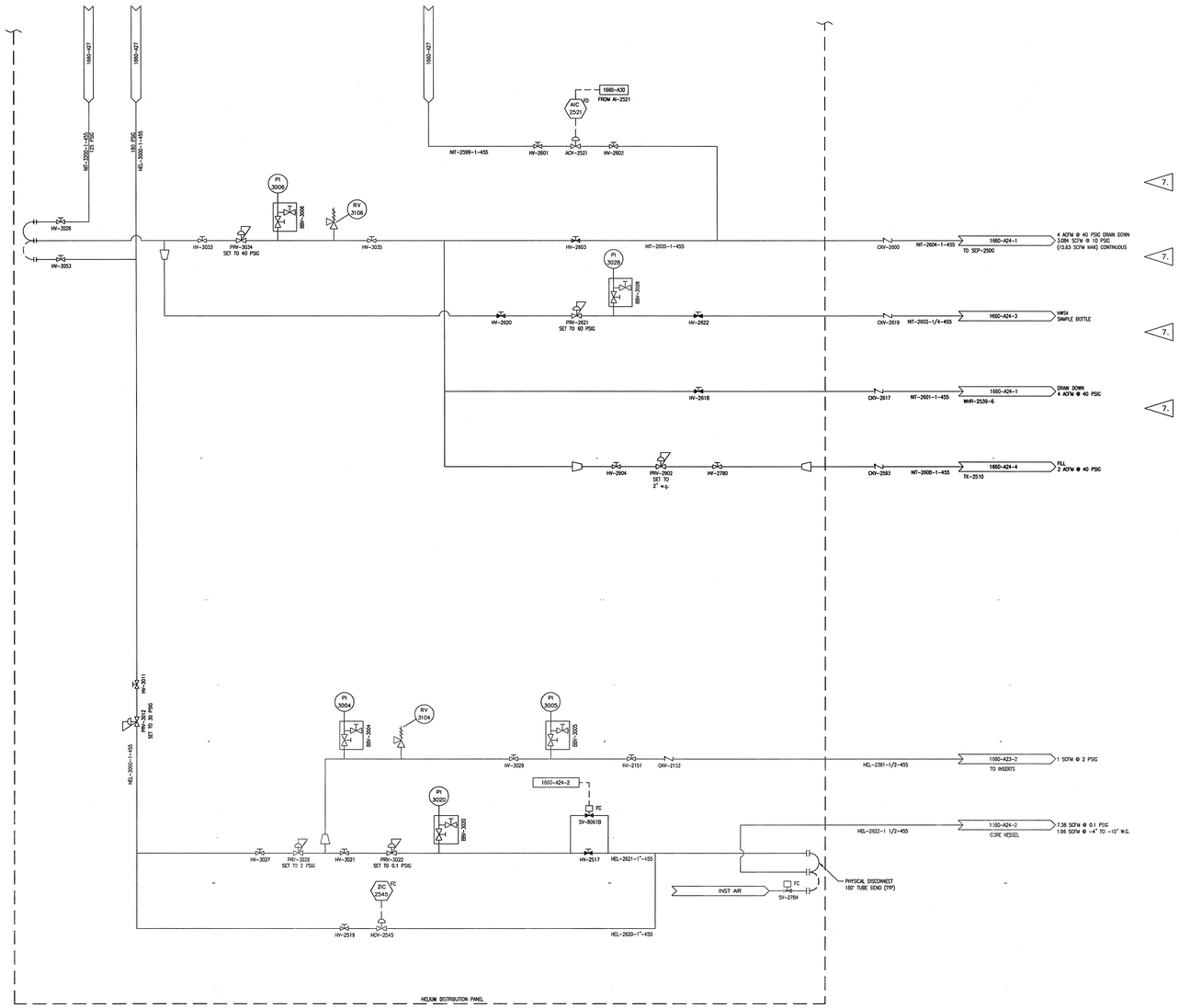

NOTES

1. SEE DWGS J8E8700H110, J8E8700H210, J8E8700H310, & J8E8700H410 FOR HELIUM DISTRIBUTION PANEL DETAILS.
2. SEE SPECIFICATION 15455 FOR ALL PANEL TUBING INFORMATION.
3. PANEL TUBING TO BE WELDED CONNECTIONS UNLESS OTHERWISE NOTED.
4. COMPONENT CONNECTIONS TO TUBING SHALL BE AS NOTED ON THE EQUIPMENT LIST.
5. RELIEF VALVE SET PRESSURES SET TO 10% ABOVE ASSOCIATED REGULATOR SET PRESSURE.
6. SEE DWG J8E8700A001 FOR P&ID LEGEND.
7. PHYSICALLY LOCATE CHECK VALVES AS CLOSE AS POSSIBLE TO END-USE INTERFACE.

NO REPRESENTATION OR WARRANTY, EXPRESSED OR IMPLIED, IS MADE AS TO THE ACCURACY, COMPLETENESS OR USEFULNESS OF THE INFORMATION OR STATEMENTS CONTAINED IN THESE DRAWINGS, OR THAT THE USE OR DISCLOSURE OF ANY INFORMATION, APPARATUS, METHOD, OR PROCESS DISCLOSED IN THESE DRAWINGS MAY NOT INFRINGE PRIVATE RIGHTS OF OTHERS. NO LIABILITY IS ASSUMED WITH RESPECT TO THE USE OF, OR FOR DAMAGES RESULTING FROM THE USE OF ANY INFORMATION, APPARATUS, METHOD, OR PROCESS DISCLOSED IN THESE DRAWINGS. DRAWINGS MADE AVAILABLE FOR INFORMATION TO BIDDER ARE NOT TO BE USED FOR OTHER PURPOSES AND ARE TO BE RETURNED UPON REQUEST OF THE FORWARDING CONTRACTOR.

NUMBER OF SECTION OR DETAIL
DRAWING ON WHICH SECTION OR DETAIL IS SHOWN OR TAKEN
SECTION AND DETAIL KEY

THIS DOCUMENT CONTROLLED BY
CHANGE CONTROL SYSTEM 3
ENGINEERING PROCEDURE SNS-TS-Q001

REV	CHANGE TYPE	CHANGE CONTROL SYSTEM	CHANGE CONTROL NUMBER	DESCRIPTION	DSN	CHK	DEPT	DATE	PE	DATE	PJ	DATE	REQ	DATE	UTB	DATE	RPE	RPE NO	DATE	ST	CV	EC	EE	EM	IE	M	PD	SE	AR
0				CERTIFIED FOR CONSTRUCTION - 1/18/02	GPS	TJ												100946	1/18/02	GPR			HG	TJ					MBB

REVISION OR ISSUE PURPOSE — REVISION APPROVALS — SQUAD CHECK

RPE: STATE OF TENNESSEE, HOUSTON T. JERNIGAN, REGISTERED PROFESSIONAL ENGINEER, 100946

REV. 0 DATE 1/18/02

DRAWING APPROVALS		
DSN	G.P. SAUNDERS	5/21/01
DRW	A. FARLESS	4/17/01
CHK	T. JERNIGAN	1/2/02
DEPT		
PE		
PJ		
REQ		1/22/02
UTB		1/22/02

106060000-J8E-8700-A028

Knight Jacobs — Knight/Jacobs Joint Venture, 701 Scarboro Road, MS 8253, Oak Ridge, TN 37830, 865-241-9433, fax 865-241-3400

Sverdrup Technology, Inc., Tullahoma, TN 37388

UT-BATTELLE — Oak Ridge National Laboratory, managed for the DEPARTMENT OF ENERGY under U.S. GOVERNMENT contract DE-AC05-00OR22725, UT-BATTELLE, LLC. ◆ Oak Ridge, Tennessee

PROJECT NAME: SPALLATION NEUTRON SOURCE

HELIUM/NITROGEN SYSTEM P&ID

1	48	49	50	PLANT	BLDG	FL	SH.	OF	TYPE	CLASS
3	J	X	X	3	3700		1	1	P	U

51	52	53	WBS		REV
NC	NA		106060000	J8E8700A028	0

P:\90618\DRAWINGS\ISSUED\MECH\8700\1.6\02-01-18 (CFC)\J8E8700A028.DWG