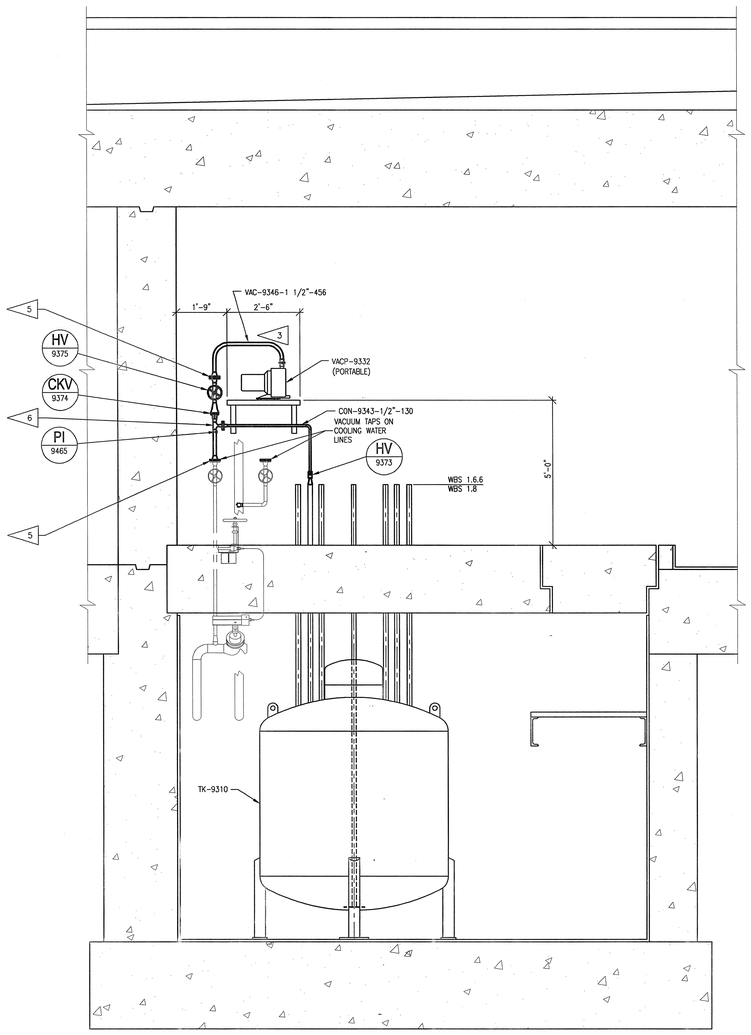

SECTION A
SCALE: 1/2"=1'-0"
J8E8520V500

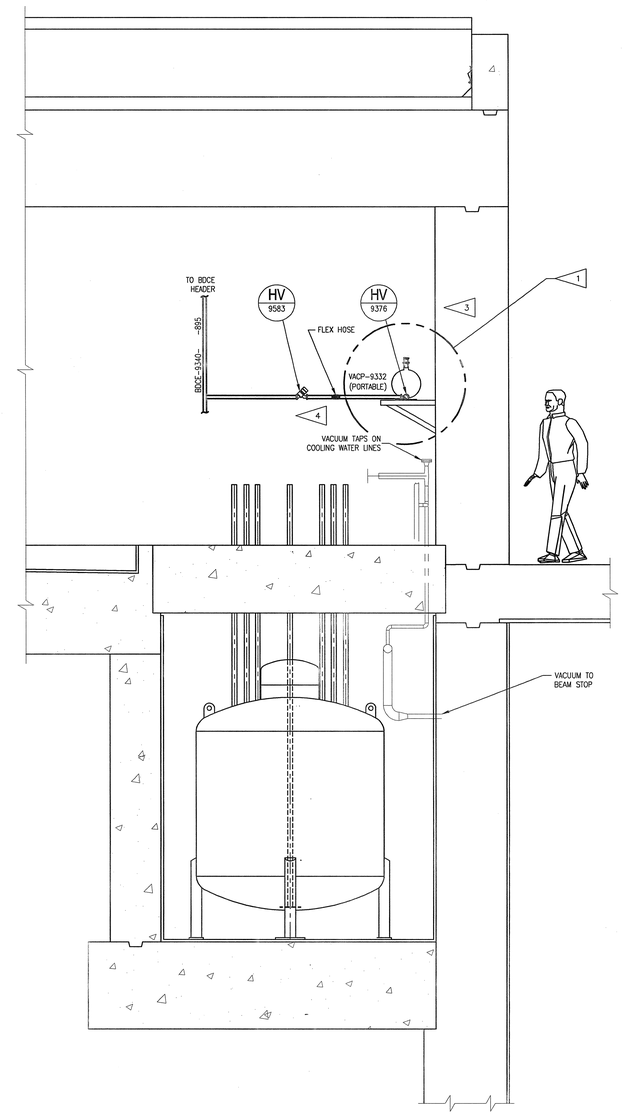

SECTION B
SCALE: 1/2"=1'-0"
J8E8520V500

GENERAL NOTES

1. SEE DRAWING J8E8700G005 FOR PUMP SUPPORT.
2. SEE DRAWING J8E8700G003 FOR INSTRUMENT CONNECTIONS.
3. VACUUM PUMP TO BE PORTABLE. FLEXIBLE HOSE PROVIDED BY OTHERS.
4. VACUUM PUMP DISCHARGE TO BE CONNECTED TO EXISTING HOG LINE VIA HV-9376.
5. PORTABLE SPOOL PIECE TO BE ATTACHED TO PIPE CONNECTION.
6. CONDENSATE TRAP TO BE AS SPECIFIED IN SECTION 15456 FOR VACUUM PUMP OPERATIONS.

2' 1' 0 1' 2' 4'
SCALE 1/2" = 1'-0"

DEVICE DESIGNATOR
SEE DWG J8E8700A001
FOR ABBREVIATION LIST
XX
XXXX
DEVICE NUMBER
(PER PLIC)

NO REPRESENTATION OR WARRANTY, EXPRESSED OR IMPLIED, IS MADE AS TO THE ACCURACY, COMPLETENESS OR USEFULNESS OF THE INFORMATION OR STATEMENTS CONTAINED IN THESE DRAWINGS, OR THAT THE USE OR DISCLOSURE OF ANY INFORMATION, APPARATUS, METHOD, OR PROCESS DISCLOSED IN THESE DRAWINGS MAY NOT INFRINGE PRIVATE RIGHTS OF OTHERS. NO LIABILITY IS ASSUMED WITH RESPECT TO THE USE OF, OR FOR DAMAGES RESULTING FROM THE USE OF ANY INFORMATION, APPARATUS, METHOD, OR PROCESS DISCLOSED IN THESE DRAWINGS. DRAWINGS MADE AVAILABLE FOR INFORMATION TO BIDDER ARE NOT TO BE USED FOR OTHER PURPOSES AND ARE TO BE RETURNED UPON REQUEST OF THE FORWARDING CONTRACTOR.

NUMBER OF SECTION OR DETAIL
DRAWING ON WHICH SECTION OR DETAIL IS SHOWN OR TAKEN
SECTION AND DETAIL KEY

THIS DOCUMENT CONTROLLED BY
CHANGE CONTROL SYSTEM 3
ENGINEERING PROCEDURE SNS-TS-G001

REV	CHANGE TYPE	CHANGE CONTROL SYSTEM	CHANGE REQUEST NUMBER	DESCRIPTION	DSN	CHK	DEPT	DATE	PE	DATE	PJ	DATE	REQ	DATE	UTB	DATE	RPE	RPE NO	DATE		ST	CV	EC	EE	EM	IE	M	PD	SE	AR
0				CERTIFIED FOR CONSTRUCTION - 1/18/02	TML	GPS												100946	1/18/02		GPR			HG	RMM					GPS

REVISION OR ISSUE PURPOSE — REVISION APPROVALS — SQUAD CHECK

RPE — HOUSTON, TEXAS — REGISTERED PROFESSIONAL ENGINEER — 100946
REV. 0 DATE 1/18/02

DSN	T.M. LEANZA TML	2/21/01
DRW	T.M. LEANZA TML	2/21/01
CHK	G.P. SAUNDERS GPS	1/7/02
DEPT		
PE		
PJ		
REQ		
	Louis L. Jacobs	1/22/02
UTB	T. McNamara	1/22/02

DRAWING APPROVALS

108000000-J8E-8520-V501

Knight/Jacobs Joint Venture
701 Scarboro Road, MS 8253
Oak Ridge, TN 37830
865-241-9433
fax 865-241-3400

Sverdrup Technology, Inc.
Tullahoma, TN 37388

UT-BATTELLE
Oak Ridge National Laboratory
managed for the DEPARTMENT OF ENERGY under
U.S. GOVERNMENT contract DE-AC05-00OR22725
UT-BATTELLE, LLC. in Oak Ridge, Tennessee

PROJECT NAME:
SPALLATION NEUTRON SOURCE
RING INJECTION BUILDING
VACUUM SYSTEM
SECTIONS & DETAILS

1	48	49	50	PLANT	BLDG	FL	SH.	OF	TYPE	CLASS
3	J	X	X	8	8520		1	1	P	U
51		52		53	WBS	J8E8520V501				REV
NC		NA			108060000					0

P:\9061B\DRAWINGS\ISSUED\MECH\8520\1.6\02-01-18 (CFC)\J8E8520V501.DWG&N-2002 10:42 townsejh