GENERAL NOTES

1. ALL HELIUM AND NITROGEN TUBING SHALL COMPLY WITH THE REQUIREMENTS SET FORTH IN SPECIFICATION 15455.
2. HELIUM PANEL TO BE PROVIDED BY SPECIFICATION 11846 AND BOUGHT BY OTHERS.
3. PANEL TUBING TO BE 37° FLARE TYPE CONNECTIONS UNLESS OTHERWISE NOTED.
4. COMPONENT CONNECTIONS TO TUBING SHALL BE AS NOTED ON THE EQUIPMENT LIST.
5. PHYSICALLY LOCATE CHECK VALVES AS CLOSE AS POSSIBLE TO END-USE INTERFACES

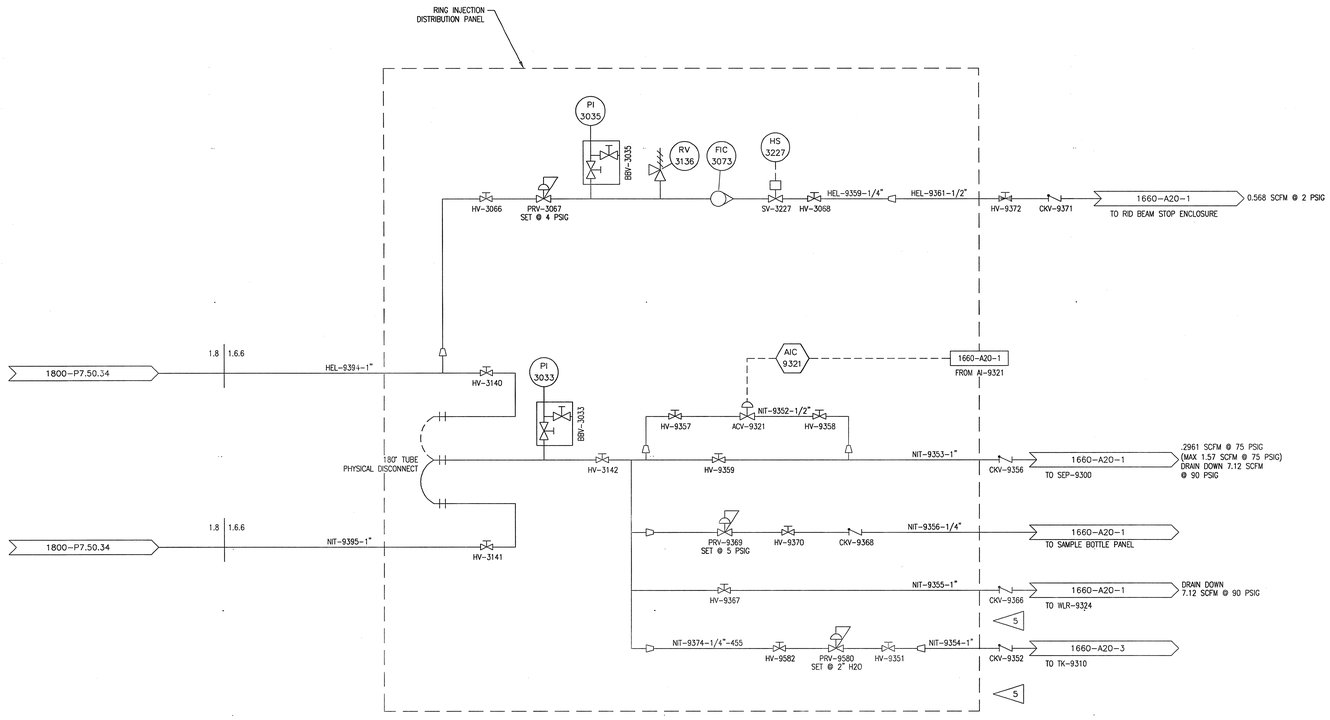

RING INJECTION DUMP BUILDING - HELIUM/NITROGEN P&ID

DEVICE DESIGNATOR SEE DWG J8E8700A001 FOR ABBREVIATION LIST

XX XXX

DEVICE NUMBER (FOR P&ID)

NO REPRESENTATION OR WARRANTY, EXPRESSED OR IMPLIED, IS MADE AS TO THE ACCURACY, COMPLETENESS OR USEFULNESS OF THE INFORMATION OR STATEMENTS CONTAINED IN THESE DRAWINGS, OR THAT THE USE OR DISCLOSURE OF ANY INFORMATION, APPARATUS, METHOD, OR PROCESS DISCLOSED IN THESE DRAWINGS MAY NOT INFRINGE PRIVATE RIGHTS OF OTHERS. NO LIABILITY IS ASSUMED WITH RESPECT TO THE USE OF, OR FOR DAMAGES RESULTING FROM THE USE OF ANY INFORMATION, APPARATUS, METHOD, OR PROCESS DISCLOSED IN THESE DRAWINGS. DRAWINGS MADE AVAILABLE FOR INFORMATION TO BIDDER ARE NOT TO BE USED FOR OTHER PURPOSES AND ARE TO BE RETURNED UPON REQUEST OF THE FORTHWORKING CONTRACTOR.

NUMBER OF SECTION OR DETAIL

DRAWING ON WHICH SECTION OR DETAIL IS SHOWN OR TAKEN

SECTION AND DETAIL KEY

THIS DOCUMENT CONTROLLED BY

CHANGE CONTROL SYSTEM 3

ENGINEERING PROCEDURE SNS-TS-G001

REV	CHANGE TYPE	CHANGE CONTROL SYSTEM	CHANGE REQUEST NUMBER	DESCRIPTION	DSN	CHK	DEPT	DATE	PE	DATE	PJ	DATE	REQ	DATE	UTB	DATE	RPE	RPE NO	DATE	ST	CV	EC	EE	EM	IE	M	PD	SE	AR
0				CERTIFIED FOR CONSTRUCTION - 1/18/02	GPS	RWM											GPR	100946	1/18/02			HG	RWM					MBB	

REVISION OR ISSUE PURPOSE — REVISION APPROVALS — SQUAD CHECK

RPE — REV. 0 — DATE 1/18/02

DSN	G.P. SAUNDERS	6/27/01
DRW	T.M. LEANZA	8/27/01
CHK	R.M. MEAD	1/9/02
DEPT		
PE		
PJ		
REQ		1/14/02
UTB		1/14/02

DRAWING APPROVALS

106060000-J8E-8520-A031

Knight/Jacobs Joint Venture
701 Scarboro Road, MS 8253
Oak Ridge, TN 37830
865-241-9433
fax 865-241-3400

Sverdrup Technology, Inc.
Tullahoma, TN 37388

UT-BATTELLE
Oak Ridge National Laboratory
managed for the DEPARTMENT OF ENERGY under U.S. GOVERNMENT contract DE-AC05-00OR22725
UT-BATTELLE, LLC. ® Oak Ridge, Tennessee

PROJECT NAME:
SPALLATION NEUTRON SOURCE
RING INJECTION BUILDING
HELIUM, NITROGEN & VACUUM
P&ID

1	48	49	50	PLANT	BLDG	FL	SH.	OF	TYPE	CLASS
3	J	X	X	8	8520		1	1	P	U
51		52		53	WBS					REV
NC		NA			106060000	J8E8520A031				0

P:\90618\DRAWINGS\ISSUED\MECH\8520\1.6\02-01-18 (CFC)\J8E8520A031.DWG 1-2002 11:36 townsejh