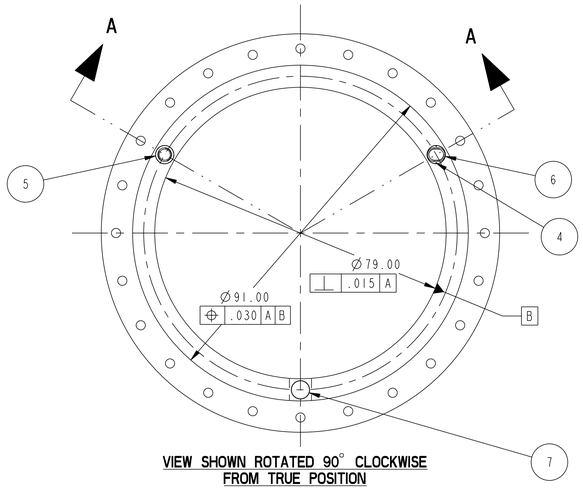

VIEW SHOWN ROTATED 90° CLOCKWISE FROM TRUE POSITION

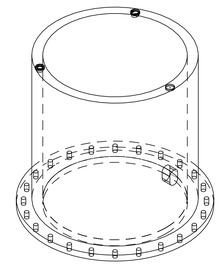

SCALE 0.03

NOTES: (UNLESS OTHERWISE SPECIFIED.)

1. INTERPRET DRAWING PER GLOBAL ENGINEERING DOCUMENTS DRAWING REQUIREMENTS MANUAL, LATEST REVISION.
2. INTERPRET DIMENSIONS AND TOLERANCES PER ASME Y14.5M, LATEST REVISION.
3. DIMENSIONS ARE IN INCHES.
4. SEE SNS EQUIP. SPECIFICATION #106040100-EQ0002 FOR REQUIREMENTS FOR MATERIALS OF CONSTRUCTION, FABRICATION, INSPECTION, TESTING AND DELIVERY.
5. ALL TOOL RADIUS SHALL BE .030 MAX. UNLESS OTHERWISE SPECIFIED.
6. SELLER SHALL PROVIDE FOR ALL WELD PREPARATIONS OR CLEARANCES BETWEEN PARTS AS REQUIRED UNLESS OTHERWISE SPECIFIED.

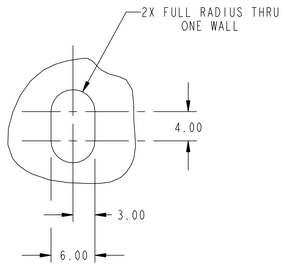

DETAIL X
SCALE 0.13

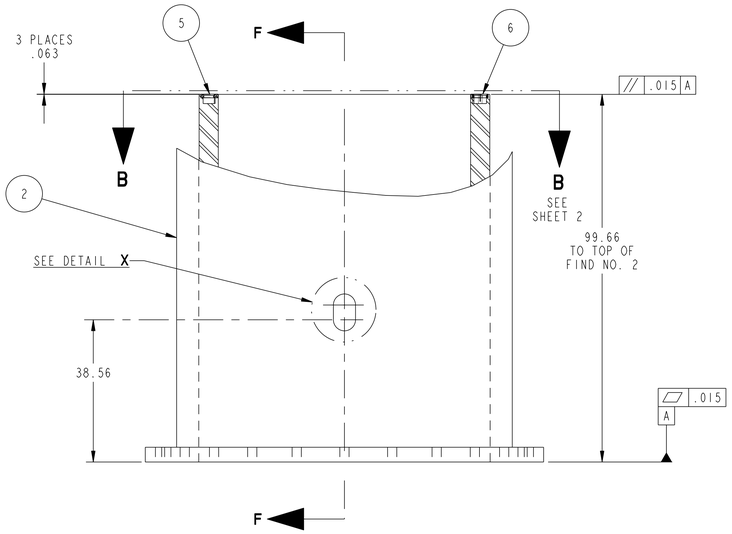

INNER SUPPORT CYLINDER WELDMENT
PARTIAL SECTION A-A
SCALE 0.063

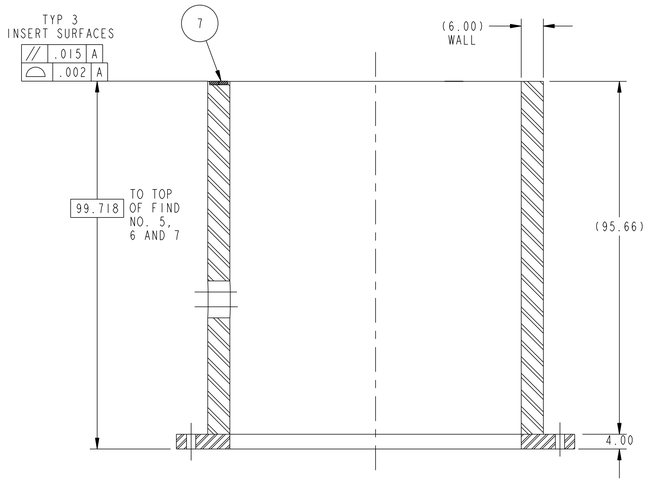

SECTION F-F

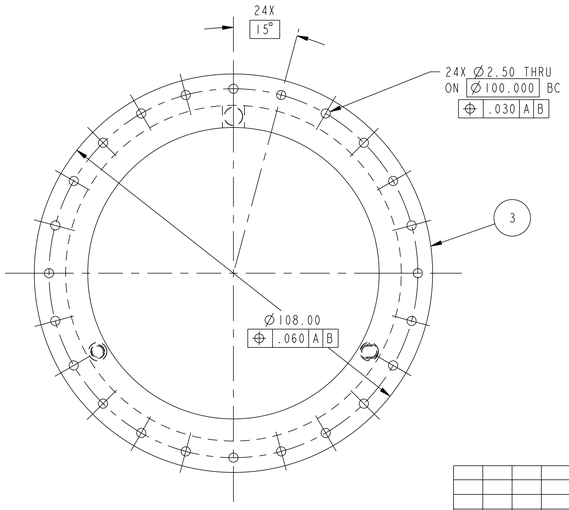

	1		106040101M8E8700A009-1	ALIGNMENT INSERT - FLAT	S44004	ASTM A 276	7
	1		106040101M8E8700A008-1	ALIGNMENT INSERT - SLOT	S44004	ASTM A 276	6
	1		106040101M8E8700A007-1	ALIGNMENT INSERT - HOLE	S44004	ASTM A 276	5
	2		106040101M8E8700A005-4	ROUND .125 DIA X 1.75_LG	S31603	ASTM A 240	4
	1		106040101M8E8700A005-3	INNER SUPPORT CYLINDER BOTTOM FLANGE	K02596	ASTM A 36	3
	1		106040101M8E8700A005-2	INNER SUPPORT CYLINDER WALL	K02596	ASTM A 36	2
AR			106040101M8E8700A005-1	INNER SUPPORT CYLINDER WELDMENT	---	---	1
000000000M 8E8700A000		CAGE CODE	PART OR IDENTIFYING NO	NOMENCLATURE OR DESCRIPTION	MATERIAL	SPECIFICATION	FIND NO
		NEXT ASSEMBLY		PARTS LIST			

QUALITY VERIFICATION
MECHANICAL AND STRUCTURAL
REFERENCE SNS-TS-G002

QV CLAUSE	DOCUMENTS REQUIRED	APPLICABLE TO PART NO *
303	MATERIAL MILL TEST REPORT	-
325	MATERIAL SELLER CERT	-
326	SPECIAL MATERIAL INSPECTION REPORT	-
205	MANUFACTURING, INSPECTION, AND TEST PLAN	-
312	FIELD INSPECTION AND TEST PLAN	-
321	WELD AND BRAZE INSPECTION REPORT	-
322	HEAT TREAT REPORT (W/CHART)	-
310	LEAK TEST REPORT	-
315	CLEANING CERT	-
318	DEVIATION REQUEST	-
319	NONCONFORMANCE PROCESS	-
323	DIMENSIONAL REPORT	-
330	FUNCTIONAL TEST REPORT	-
:	:	:
:	:	:
:	:	:
:	:	:
:	:	:
100	DOCUMENTATION	-

* SYMBOL X INDICATES APPLICABLE TO ALL PARTS OR ITEMS

QA REP ..... DATE .....

RPE

REV. XX DATE XX/XX/XX

106040101M8E8700A005

NO REPRESENTATION OR WARRANTY, EXPRESSED OR IMPLIED, IS MADE AS TO THE ACCURACY, COMPLETENESS OR USEFULNESS OF THE INFORMATION OR STATEMENTS CONTAINED IN THESE DRAWINGS, OR THAT THE USE OR DISCLOSURE OF ANY INFORMATION, APPARATUS, METHOD OR PROCESS DISCLOSED IN THESE DRAWINGS MAY NOT INFRINGE PRIVATE RIGHTS OF OTHERS. NO LIABILITY IS ASSUMED WITH RESPECT TO THE USE OF, OR FOR DAMAGES RESULTING FROM THE USE OF, ANY INFORMATION, APPARATUS, METHOD OR PROCESS DISCLOSED IN THESE DRAWINGS. DRAWINGS MADE AVAILABLE FOR INFORMATION TO BIDDER ARE NOT TO BE USED FOR OTHER PURPOSES, AND ARE TO BE RETURNED UPON REQUEST OF THE FORWARDING CONTRACTOR.

P THIS DRAWING PRODUCED ON PRO-ENGINEER

THIS DOCUMENT CONTROLLED BY
CHANGE CONTROL SYSTEM 3
SNS PROCEDURE SNS-TS-G001

REV	CHANGE TYPE	CHANGE CONTROL SYSTEM	CHANGE REQUEST NUMBER	DESCRIPTION	BY	CHK	SECT	DEPT	DATE	PE	REQ	DOE
000	-	3	-	ISSUED FOR PROCUREMENT	RWT				10/01/01			

REVISION OR ISSUE PURPOSE — REVISION APPROVALS

SCALE NOTED

TOLERANCES UNLESS OTHERWISE SPECIFIED
FRACTIONS :
XX DECIMALS ±.01
XXX DECIMALS ±.005
ANGLES ±0°15'
BREAK SHARP EDGES .06 MAX
FINISH 125 RMS UNLESS OTHERWISE SPECIFIED

DRAWING APPROVALS		DATE
DES	DA EVERITT	12/11/00
DRW	RON TAYLOR	12/11/00
CHK	KK CHIPLEY	10/01
L3	DA EVERITT	12/02/01
L2	TJ McMANAMY	12/03/01

ornl Oak Ridge National Laboratory
operated for the DEPARTMENT OF ENERGY under U.S. GOVERNMENT contract DE-AC05-00OR22725
Oak Ridge, Tennessee

SNS Spallation Neutron Source

TARGET SYSTEMS
CORE VESSEL
INNER SUPPORT CYLINDER WELDMENT

BLDG	FL	SHT	OF	CLASS
8700		1	2	

106040101M8E8700A005 REV 000

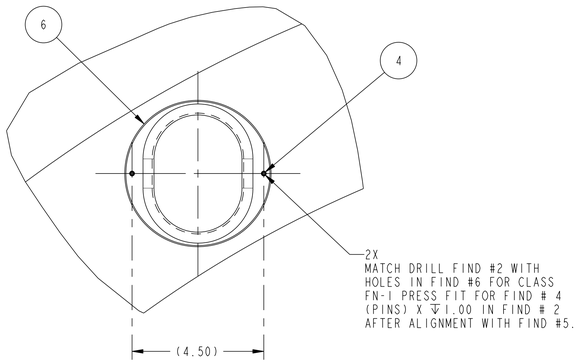

DETAIL X
SCALE 0.50

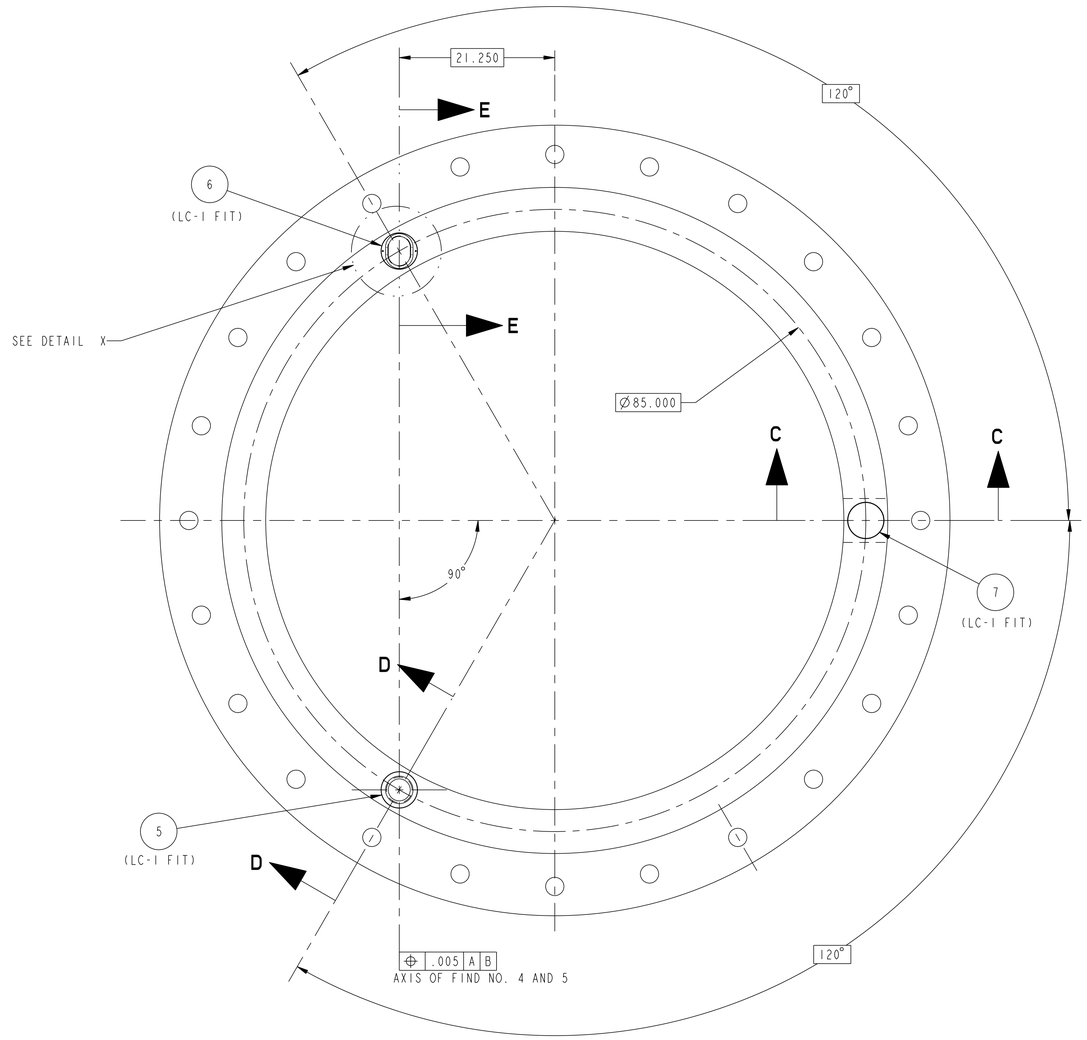

VIEW B-B
SCALE 0.125

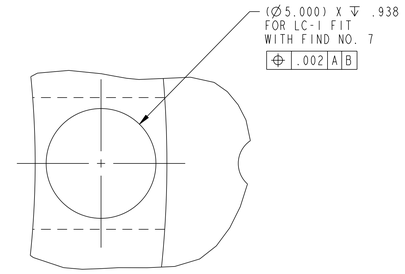

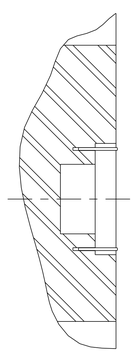

SECTION C-C
FIND NO. 7 NOT SHOWN THIS SECTION.
SCALE 0.38

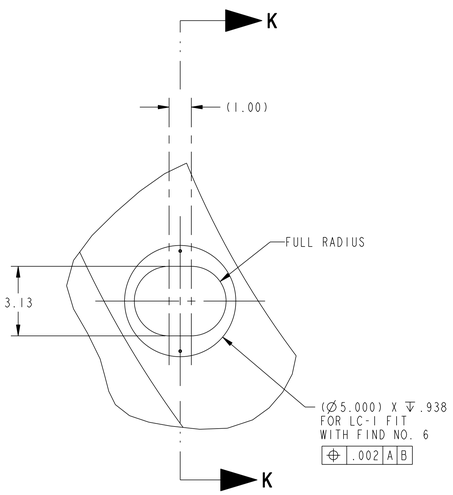

SECTION K-K

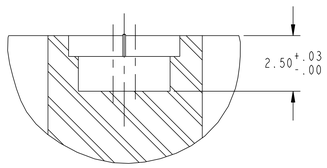

SECTION E-E
FIND NO. 6 NOT SHOWN THIS SECTION.
SCALE 0.38

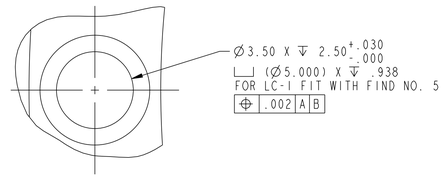

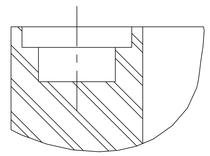

SECTION D-D
FIND NO. 5 NOT SHOWN THIS SECTION.
SCALE 0.38

NO REPRESENTATION OR WARRANTY, EXPRESSED OR IMPLIED, IS MADE AS TO THE ACCURACY, COMPLETENESS OR USEFULNESS OF THE INFORMATION OR STATEMENTS CONTAINED IN THESE DRAWINGS, OR THAT THE USE OR DISCLOSURE OF ANY INFORMATION, APPARATUS, METHOD OR PROCESS DISCLOSED IN THESE DRAWINGS MAY NOT INFRINGE PRIVATE RIGHTS OF OTHERS. NO LIABILITY IS ASSUMED WITH RESPECT TO THE USE OF, OR FOR DAMAGES RESULTING FROM THE USE OF, ANY INFORMATION, APPARATUS, METHOD OR PROCESS DISCLOSED IN THESE DRAWINGS. DRAWINGS MADE AVAILABLE FOR INFORMATION TO BIDDER ARE NOT TO BE USED FOR OTHER PURPOSES, AND ARE TO BE RETURNED UPON REQUEST OF THE FORWARDING CONTRACTOR.

P THIS DRAWING PRODUCED ON PRO-ENGINEER

SCALE NOTED

TOLERANCES UNLESS OTHERWISE SPECIFIED
FRACTIONS :
XX DECIMALS ±.02
XXX DECIMALS ±.005
ANGLES ±0°15'
BREAK SHARP EDGES .02 MAX
FINISH 125 RMS UNLESS OTHERWISE SPECIFIED

ornl Oak Ridge National Laboratory
operated for the DEPARTMENT OF ENERGY under U.S. GOVERNMENT contract DE-AC05-00OR22725
Oak Ridge, Tennessee

SNS Spallation Neutron Source

TARGET SYSTEMS
CORE VESSEL
INNER SUPPORT CYLINDER WELDMENT

BLDG	FL	SHT	OF	CLASS
8700		2	2	

106040101M8E8700A005 REV 000

106040101M8E8700A005