SECTION 15200
UPPER IN-CELL SHIELD DOOR HYDRAULIC SYSTEM

PART 1 - GENERAL

1.1 SCOPE

A. This specification addresses the design, materials, fabrication, inspection, performance testing, preparation for shipment, and documentation of the Upper In-Cell Shield Door Hydraulic System that will be used to rotate a heavy shield door. The System consists of the Hydraulic Power Unit (HPU) and the Hydraulic Valve Panel (HVP). The Seller shall be responsible for the design, fabrication, assembly, testing, disassembly, cleaning, packaging and shipping of all items addressed by this specification.

1.2 INDUSTRY CODES AND STANDARDS

A. The Hydraulic System shall be designed, fabricated, tested, and inspected in accordance with the industry codes and standards listed below.
   1. ASME Boiler and Pressure Vessel Code, 2000 Base with 2001 Addenda
   2. ASTM A269, Standard Specification for Seamless and Welded Austenitic Stainless Steel Tubing for General Service
   3. AWS D1.1 2000 Structural Welding Code - Steel
   4. HI, Hydraulic Institute Standards for Centrifugal, Rotary, and Reciprocating Pumps (15th Ed.)
   5. NFPA 70, National Electrical Code (NEC)
   6. SAE J1453, Fitting - O-ring Face Seal FSC 4730

1.3 RELATED SECTIONS

A. Section 09960, “High Performance Coatings.”

B. Section 15050, “Piping Systems.”

1.4 DRAWINGS

A. J1.28.32, “In Cell Shield Door Control Panel Layout and Electrical Wiring Diagram.”

1.5 QUALITY ASSURANCE

A. The HPU and HVP shall be furnished by a firm, which is qualified and regularly engaged in this type of work. The firm shall maintain facilities for fabrication of subject items.

B. Materials and products used in fabrication of the HPU and HVP shall be new. Materials shall be furnished and installed in strict accordance with Sub-Tier Supplier's current published recommendations, recognized good practices, Buyer supplied drawings, and these specifications.

C. Items used in quantity, such as ball valves, accessories, fittings, etc., shall be the product of one Supplier and used only for the recommended services.

D. The Supplier shall have and maintain a QA/QC program that is acceptable to the Buyer. The Supplier's quality program shall be submitted with the Seller’s proposal for review by the Buyer. The program shall provide control over activities affecting quality to an extent consistent with their importance. The Supplier's quality control program shall be reviewed and approved by the Buyer.

E. The Buyer reserves the right to access the Supplier's and Sub-Tier Supplier's facilities at which work is being performed. Access shall be provided for any personnel designated by the Buyer. The purpose of accessing the facilities shall be to perform assessments, reviews, surveillance, inspections, investigations, or test witnessing applicable to the work being performed by the Supplier or Sub-Tier Suppliers under this specification.

F. The Supplier shall resolve all deficiencies noted to the Buyer's satisfaction. The Buyer's concurrence with "use-as-is" or "repair" disposition of any nonconformance must be obtained. Concurrence will not be unreasonably withheld. The terms "use-as-is, "repair, and "rework" are defined below.
   1. "Use-as-is" is a disposition permitted for a nonconforming item when it can be established that the item is satisfactory for its intended use.
   2. "Repair" is the process of restoring a nonconforming characteristic to a condition to ensure that the capability of an item to function reliably and safely is unimpaired, even though that item still does not conform to the original requirements.
   3. "Rework" is the process by which an item is made to conform to the original requirements by completion or correction.

G. Witness and hold points are specific points in the fabrication process requiring witnessing or verification by the Buyer. Activities shall not proceed past a hold point without witness or verification by the Buyer unless specifically waived in writing by the Buyer.

PART 2 - PRODUCTS

2.1 GENERAL REQUIREMENTS

A. The HPU and HVP will be located in interior rooms that will be maintained at 72 °F and 40% to 50% Relative Humidity. The HPU and HVP will be located in unclassified electrical areas. The installation location is approximately 1000 ft. above sea level.

B. The HPU and HVP will be used to power and operate two Rotary Hydraulic actuators that will rotate a large door about a horizontal axis.

C. The door is approximately 20’ wide by 12’ tall, fabricated using steel and weighs 75,000 lbs. The door is normally in the vertical position (closed).

D. The door opens in one direction and is fully open after a 90 ° rotation.

E. The two Rotary Hydraulic Actuators have been selected by the Buyer and are outside the scope of this specification.

F. The hydraulic fluid that will be used in the Upper In-Cell Shield Door Hydraulic System is Citgo’s Glycol FR-5046HP fluid. The fluid is a water-glycol, high pressure, polymer thickened, and fire resistant hydraulic fluid. All wetted components, including seals, shall be compatible with this fluid.

2.2 DESIGN REQUIREMENTS FOR THE HPU

A. Functional Characteristics
   1. The hydraulic system design pressure shall be 3000 psig.
   2. The nominal hydraulic flow rate shall be 7.5 gallons per minute.
   3. The HPU will be operated two times per day.
   4. The HPU shall be equipped with a manually operated pump for emergency operations.

B. Pumps
1. The main pump shall be a pressure compensated axial piston type with variable displacement.
2. The pumps shall be rated for 3000 psig.
3. The pumps shall include a check valve at the pump outlet.
4. The main pump inlet shall be provided with a manual suction shut off valve.
5. Each manual suction shut off valve shall be equipped with a limit switch confirming the OPEN condition.
6. The pumps shall be a standard, commercially available units.

C. Reservoir
1. The reservoir shall be sized appropriately for the operating conditions. The reservoir shall be of stainless steel construction. It is preferred that the reservoir be a standard item and not custom fabricated for this procurement.
2. A gasketed clean out port and a fluid sampling port shall be provided.
3. A visual sight gauge with marks placed adjacent to the sight gauge indicating reservoir full and low fluid levels shall be provided. The reservoir volume shall be no less than 3 times the flow rate of the pump (i.e. 3x7.5=22.5 gallons)
4. A low fluid level switch shall be provided for remote monitoring.
5. A thermometer located at the low fluid line shall be furnished.
6. A high temperature switch set for 150° F shall be included for remote monitoring.
7. A temperature switch shall be installed into a thermowell below the normal fluid level in the reservoir.
8. A drain plug shall be provided.
9. A filter breather capable of removing 99% of particles larger than 3 micron shall be included.

D. Filtration
1. The HPU shall be provided with a 10 micron pressure side filter with local visual differential pressure indicator, and isolation valves. Pressure rating of the pressure filter and isolation valves shall be 3000 psi.
2. The HPU shall be provided with a 10 micron return side filter with local visual differential pressure indicator, and isolation valves. Pressure rating of the return filter and isolation valves shall be 3000 psi.

E. Valving
1. Valves shall be commercially available.
2. The HPU shall be provided with a pressure relief valve for safety.

F. Fittings
1. Fittings shall be Parker Seal-Lok stainless steel series. Only Parflange style fittings shall be used. Fittings shall conform to the requirements set forth in SAE J1453.
2. NPT fittings are disallowed without Buyer approval.

G. Cooling
1. The hydraulic fluid temperature shall be limited to less than 150° F within the hydraulic tubing, and less than 120° F within the reservoir. The Seller shall determine the required cooling capacity. Supporting calculations are required. Note that the HPU is not operated continuously. See operation sequence described in the HVP design requirements section. If cooling is required, Buyer can supply 55° F cooling water.

H. Electrical and Control
1. The motor shall be a commercially available, 480 VAC, 3 phase, 60 Hertz, totally enclosed fan cooled type motor.
2. Motor starter shall be provided by the Buyer.

3. Buyer will provide control panel with “HPU start/stop switch”, “motor on” indicator light. The Buyer supplied control panel will be mounted separate from the HPU.
4. Seller shall provide local NEMA 4 junction boxes for control wiring and power. Local wiring on the HPU shall be completed by the Seller.
5. See drawing referenced in Section 1.4 for complete wiring interface detail.
6. Seller shall provide a lockable fused disconnect switch, NEMA 4, with fuses, to interface with the 480 volt electric motor. Switch shall have auxiliary contact kit for remote tripping.

I. Miscellaneous
1. The HPU shall be skid mounted, and have features that allow for forklift handling.
2. The HPU shall have a drip pan with a drain.
3. The pressure tubing shall be sized based on a 15 ft/sec maximum fluid velocity.
4. The return side tubing shall be sized based on a 8 ft/sec maximum fluid velocity.
5. The suction tubing shall be sized based on a 4 ft/sec maximum fluid velocity.

J. Tubing
1. Tubing sizing and wall thickness calculations shall be prepared by the Seller and submitted to the Buyer for approval.

2.3 DESIGN REQUIREMENTS FOR THE HVP

A. Functional Characteristics
1. The HVP will be located within approximately 40 feet of the two hydraulic actuators and is located approximately 100 feet away from the HPU.
2. The design of the HVP components shall be based on the Upper In-cell Shield Door hydraulic schematic attached to the last page of this specification. The Supplier may propose alternate schematic designs.
3. Time to open the door is 2 minutes. The door shall be powered open.
4. The door may remain open anywhere from 5 minutes to an hour. It is important that the door not drift when open.
5. Time to close the door shall be 2 minutes. The door shall be powered to close.
6. The HVP shall be designed to interface with two rotary actuators for controlling motion of the door. The rotary actuators come with internal, integral dual counter balance valves to hold the load of the door. The valves are Sun Hydraulics Model CBCG-LJV counter balance valves.
7. The integral counterbalance valves shall be set such that the pressure differential between the “open” port and the “close” port on the rotary actuators does not exceed 250 psig.

B. Directional Control Valve
1. The control valve can be a directional valve or proportional valve to best suit the application.
2. The Supplier shall provide justification for the selection and sizing calculation.
3. The valve shall be selected to prevent hydraulic hammer due to valve operating too fast and creating pressure transients in the pipelines. Accumulators may be incorporated into the design to mitigate fluid hammer with Buyer approval. If necessary, the accumulator shall be designed and fabricated in accordance with ASME Section VIII Division 1.

C. Flow Control Valve
1. A flow control valve shall be provided to control both the opening velocity and closing velocity of the door.
2. The flow control shall be sized to lower the door in 2 minutes.
3. Seller shall provide justification for the type selected and a sizing calculation.

D. Electrical and Controls
   1. The directional control valve and other electrical valves shall be powered with 120 VAC, 1 Phase, 60 Hertz.
   2. Local wiring on the HVP shall be completed by the Seller.
   3. Seller shall wire solenoids into a integrally mounted junction box with terminal blocks for terminating, plus 20% spare terminals.

E. Fittings
   1. Fittings shall be Parker Seal-Lok stainless steel series. Only Parflange style fittings shall be used. Fittings shall conform to the requirements set forth in SAE J1453.
   2. NPT fittings are disallowed without Buyer approval.

F. Miscellaneous
   1. The HVP component panel shall be provided by the Seller. The panel shall be housed in a NEMA 4 enclosure.
   2. The pressure tubing shall be sized based on a 15 ft/sec maximum fluid velocity.
   3. The return tubing shall be sized based on a 8 ft/sec maximum fluid velocity.
   4. The hydraulic valves shall be designed such that the door remains in its current position upon power failure to the pump and/or control valve.

G. Tubing
   1. Tubing sizing and wall thickness calculations shall be prepared by the Seller and submitted to the Buyer for approval.

2.4 MATERIAL REQUIREMENTS

A. Tube fittings shall be stainless steel

B. Tubing shall be stainless steel in accordance with ASTM A269.

C. All exposed carbon steel surfaces of the HPU and HVP susceptible to rust shall be cleaned, primed and painted gray in accordance with Section 09960.

PART 3 - EXECUTION

3.1 FABRICATION REQUIREMENTS

A. Controls are to be exercised during all stages of fabrication to minimize exposure of stainless steel to contaminants including chlorides and carbon steel. Any compounds, liquids or markers that come into contact with stainless steel surfaces shall not contain more than 250 ppm by weight chlorides.

B. All general (non-pressure containing) welding associated with HPU and HVP shall be in accordance with AWS D1.1

C. If accumulators are necessary, design, fabrication and welding shall be in accordance with ASME Section IX.

D. Parflange tube features shall be created using the Parflange 1040 machine only.

E. The general means and methods described in Section 15050 apply to systems fabricated under this section.

3.2 TESTING AND INSPECTION

A. The Supplier shall be responsible for all testing and inspection required by this specification. The Supplier shall provide the test location, equipment, instrumentation, and any temporary connections and auxiliary parts necessary to execute the tests. The Supplier shall also provide test personnel qualified to conduct, record and verify test results. Instruments used for testing and inspection shall carry a current certification from NIST.

B. All hold points shall be identified on the Buyer approved Fabrication Schedule and the Shop Traveler. For all hold points requiring witness or inspection at the Supplier's facility, the Supplier shall provide ten (10) working days advance written notification to the Buyer so that a Buyer representative may be present at the Supplier's shop. The Supplier shall incorporate, at a minimum, the following fabrication hold points.
   1. Leak Tests.
   2. Final Assembly Inspection.
   3. Functional Testing of Systems.

C. The Supplier shall thoroughly clean HPU and HVP of water, debris, weld splatter, grease, oil, markings from pens and dyes, shop soil, visible rust, and other foreign matter before shipment.

D. Cleaning methods that do not introduce iron or chloride contamination shall be used for stainless steel fabrication. Cleaning materials must be controlled; no chloride bearing solvents may be used. If a detergent is needed to ensure thorough cleaning, it shall also be low in chloride concentration. The final wash and rinse shall be accomplished using fresh water. The detergent, wash and rinse shall contain less than 250 ppm chlorides. Piping Systems shall be cleaned in accordance with Section 15072, Cleaning.

E. The Supplier shall draft and execute a detailed Functional Test procedure for the HPU and HVP subassemblies. Seller shall submit this test procedure to the Buyer for approval prior to test of the unit. Necessary aspects of Functional Testing are listed in Table 15200-1. The Supplier shall prepare a Functional Test Report documenting the results. The Buyer shall witness all Functional Testing.

F. The Seller shall inspect and verify that the dimensions of the HPU and HVP assemblies comply with the Buyer approved fabrication drawings.

G. The Supplier shall visually inspect all structural welds. All welds shall be visually free from defects per AWS D1.1 Section 6 or AWS D1.6, Section 6 for welding of carbon steel and stainless steel as appropriate.

H. The high pressure side of the HPU and HVP shall be pressure tested to 1.5 times the design pressure. The pressure is to be held for a minimum of 5 minutes. No measurable external leakage shall be permitted. In addition, while system is under pressure, the pressure containing components of the system shall be inspected. No component shall rupture, crack or permanently deform under pressure.

Table 15200-1 Testing and Inspection Requirements

Mechanical Fabrication Subassembly	*Functional Testing*	*Pressure Testing*	*Dimensional Inspection*	*Visual Weld Inspection*	*Aspects of Functional Testing*
HPU	X	X	X	X	-48 hour run test -Valve functionality -Instrumentation functionality -Wiring continuity -Flow test (over full range)
HVP	X	X	X		-Functionality of valves -Functionality of flow control valve -Wiring continuity

3.3 PACKAGING, DELIVER, STORAGE AND HANDLING

A. The Supplier shall provide written recommendations for field storage and handling of the HPU and HVP.

B. HPU and HVP shall not be packaged and shipped until all testing and inspection has been performed and the results have been approved by the Buyer.

C. Mechanical Fabrication shall be shipped completely assembled. If shipping limitations prevent complete assembly, the Supplier shall propose a recommended alternative for approval by the Buyer.

D. Ship large items mounted on skids or in crates suited for the intended method of transport. Lifting weight of large skids shall be clearly marked and listed in the shipping documents.

E. Loose components shall be bagged, identified and crated separately. Each shipping package shall be labeled with a waterproof label indicating applicable Subassembly name and purchase order number. The Supplier shall completely identify the quantity and location of temporary material contained within the HPU and HVP for shipment, handling or storage.

F. The Supplier shall be responsible for the dimensional stability and overall integrity of the items during shipment. The center of gravity shall be clearly marked on the skids or crates for hoisting and rigging purposes.

3.4 SUBMITTALS

A. A Fabrication Schedule shall be provided showing all fabrication steps, hold points, tests and inspections. The Supplier shall provide the Buyer a revised Fabrication Schedule within

seven (7) working days of a modification to the contract which revises the required delivery date or when other approved Buyer modifications change a scheduled assembly step, hold point, test or inspection.

B. A controlled copy of the Supplier's Quality Assurance Program Manual and an index of the implementing procedures shall be submitted with the proposal.

C. The Supplier's shall submit a visual weld inspection procedure. The procedure shall describe how to accomplish inspection; test report forms shall be included.

D. Design calculations outlined in Section 2.

E. Shipping lists shall be prepared and submitted, and shall clearly identify the contents of each package sent to the Buyer. All submittals and shipping containers shall be identified with the Buyer's purchase order number.

F. The Supplier shall provide a detailed cleaning and packaging procedure specifically addressing the requirements of this specification.

G. The Supplier shall submit shop drawings for the HPU and HVP. Shop drawings includes mechanical, electrical and hydraulic. As-Built drawings (redlines) shall be submitted for same.

H. The Supplier shall submit a detailed Functional Test Procedure and Report. Systems requiring Functional Testing is identified in Table 15200-1.

I. The Supplier shall submit a detailed dimensional inspection procedure. A dimensional inspection report shall be submitted for each subassembly.

J. The Supplier shall submit a pressure test procedure and report.

K. The Supplier shall prepare documentation packages with the proposal, prior to fabrication, and after fabrication in accordance with Table 15200-2.

L. The Seller shall provide a Certificate of Conformance stating that the HPU and HVP have been designed, fabricated and tested in accordance with all the requirements set forth in this specification.

M. The Seller shall provide an operation and maintenance manual for the HPU and HVP. The manual shall include a recommended spare parts list and warranty information. The manual shall be made available for review at the time of Functional Testing.

Table 15200-2 Documentation Requirements

Document Description	*With Proposal*	*Prior to Fabrication*	*Prior to Shipment*
Quality Assurance Program Manual	X		
Fabrication Schedule	X	X	
Functional Test Procedures		X	
Functional Test Report			X
Shop Drawings		X	
Pressure Test Procedure		X	
Pressure Test Report			X
Certificate of Conformance			
As-Built Drawings			X
Cleaning Procedure		X	
Packaging and Shipping Procedure		X	
Visual Inspection Procedures		X	
Visual Inspection Reports			X
Dimensional Inspection Procedure		X	
Dimensional Inspection Report			X
Operations and Maintenance Manual with Spare Parts List and Warranty			X
Design Calculations		X	
Shipping List			X

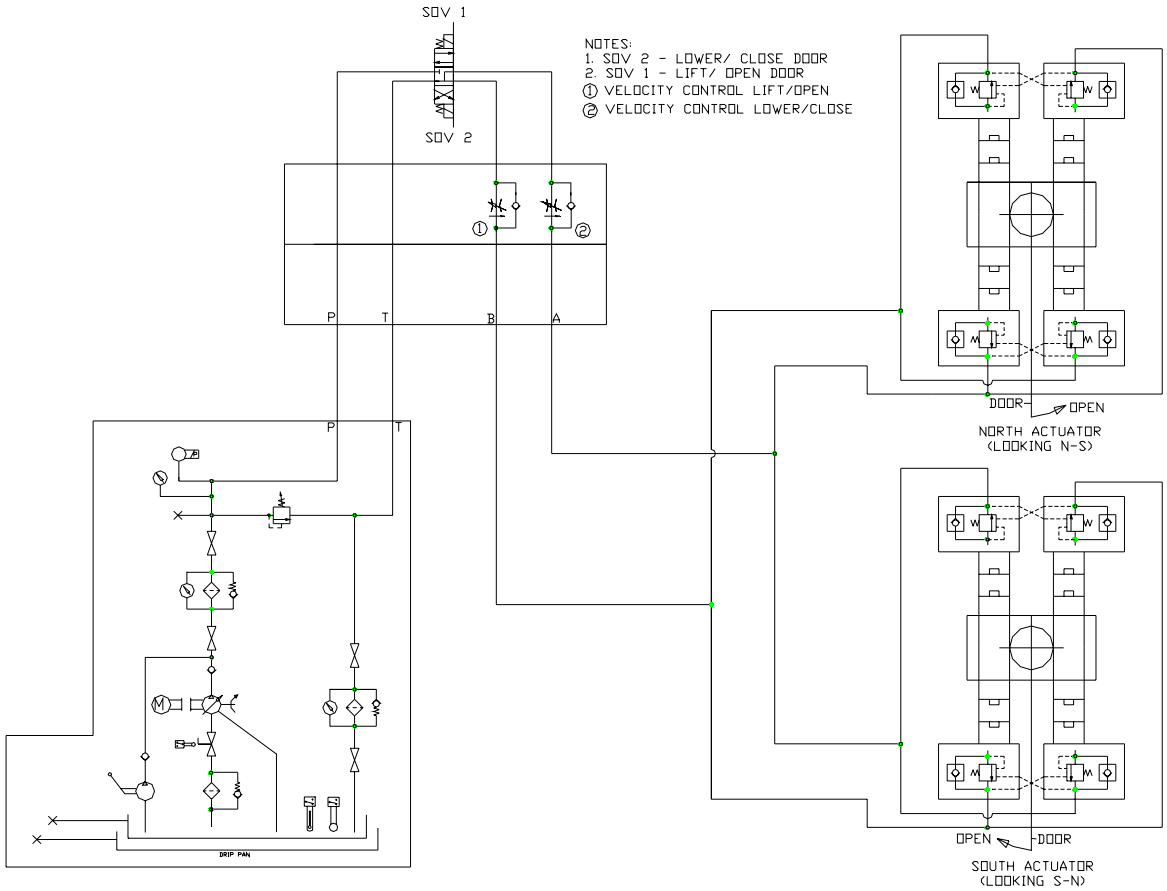

END OF SECTION 15200