GENERAL NOTES:

1. CONTRACTOR SHALL MAKE NO SPLICES IN THE MANHOLE UNLESS NOTED OTHERWISE.

KEYED NOTES:

1. DOUBLE FEED COMING OUT OF THE SWITCH GEAR, 24W GOING TO RF-PS1 AND 24E GOING TO HEBT ME9 AND CONTINUING.
2. T-SPLICE IN MANHOLE M20.
3. T-SPLICE IN MANHOLE M20.(FUTURE)
4. 300kVA TRANSFORMER PART OF THIS PACKAGE.

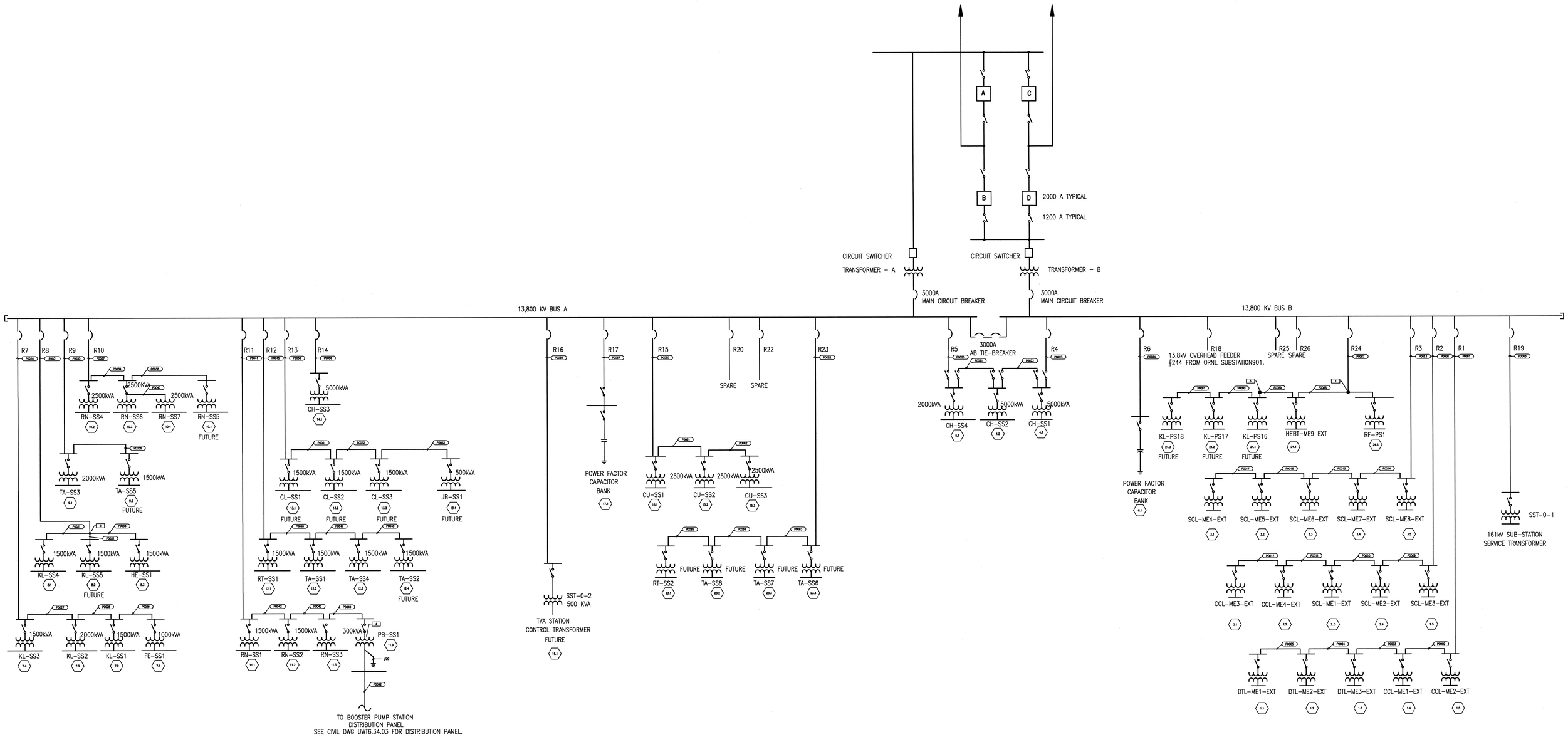

NO REPRESENTATION OR WARRANTY, EXPRESSED OR IMPLIED, IS MADE AS TO THE ACCURACY, COMPLETENESS OR USEFULNESS OF THE INFORMATION OR STATEMENTS CONTAINED IN THESE DRAWINGS, OR THAT THE USE OR DISCLOSURE OF ANY INFORMATION, APPARATUS, METHOD, OR PROCESS DISCLOSED IN THESE DRAWINGS MAY NOT INFRINGE PRIVATE RIGHTS OF OTHERS. NO LIABILITY IS ASSUMED WITH RESPECT TO THE USE OF, OR FOR DAMAGES RESULTING FROM THE USE OF ANY INFORMATION, APPARATUS, METHOD, OR PROCESS DISCLOSED IN THESE DRAWINGS. DRAWINGS MADE AVAILABLE FOR INFORMATION TO BIDDER ARE NOT TO BE USED FOR OTHER PURPOSES AND ARE TO BE RETURNED UPON REQUEST OF THE FORWARDING CONTRACTOR.

NUMBER OF SECTION OR DETAIL
DRAWING ON WHICH SECTION OR DETAIL IS SHOWN OR TAKEN
SECTION AND DETAIL KEY

THIS DOCUMENT CONTROLLED BY
CHANGE CONTROL SYSTEM 4
ENGINEERING PROCEDURE SNS-ENG-0001

REV	CHANGE TYPE	CHANGE CONTROL SYSTEM	CHANGE REQUEST NUMBER	DESCRIPTION	DSN	CHK	DEPT	DATE	PE	DATE	PJ	DATE	REQ	DATE	UTB	DATE	RPE	RPE NO	DATE	ST	CV	EC	EE	EM	IE	M	PD	SE	AR
0				CERTIFIED FOR CONSTRUCTION – 7/13/2001						7/16/01				7/16/01			VGS	106009	7/13/01	RW	AW	BS	AK	BS	BJ	--	BS	--	WS

REVISION OR ISSUE PURPOSE — REVISION APPROVALS — SQUAD CHECK

RPE: VICTOR G. STEPAN, REGISTERED ENGINEER, 7-10-01, 0015996, STATE OF TENNESSEE
REV. 0 DATE 7-11-01

DSN	A. SANDHU	7/13/01
DRW	G.GARCIA	7/13/01
CHK	A.KANER	7/13/01
DEPT		
PE		7/16/01
PJ		7/16/01
REQ		
UTB		7/16/01

DRAWING APPROVALS

108040000-U8E-8000-A086

Knight/Jacobs Joint Venture
701 Scarboro Road, MS 8253
Oak Ridge, TN 37830
865-241-9433
fax 865-241-3400

KNIGHT
Knight Advanced Technology
4715 E. Broad, Bldg. 1, #1
Phoenix, AZ 85040

UT-BATTELLE
Oak Ridge National Laboratory
managed for the DEPARTMENT OF ENERGY under U.S. GOVERNMENT contract DE-AC05-00OR22725
UT-BATTELLE, LLC. ® Oak Ridge, Tennessee

PROJECT NAME:
SPALLATION NEUTRON SOURCE

SITE UTILITIES
ELECTRICAL SINGLE LINE DIAGRAM

1	48	49	50	PLANT	BLDG	FL	SH.	OF	TYPE	CLASS
3	U	X	X	8	8000		1	1	D	U

51	52	53	WBS		REV
NC	NA		1.8.4	UEL7.61.01	0

Date: 07/16/2001 Time: 19:15:09
Username: SANDHUA
File: P:\SNS\PROJECTS\7000\700_CADD\CADD_FILES\UEL7-61-01.DWG

AutoCAD