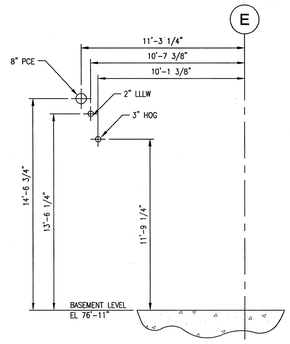

SECTION A
SCALE: 1/4"=1'-0" U6.10.31

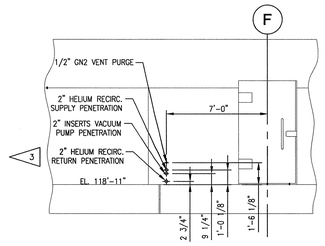

SECTION J
SCALE 1/4"=1'-0" U6.10.32

NOTES

1. ALL PENETRATIONS TO BE DIRECTLY EMBEDDED INTO THE WALL UNLESS NOTED OTHERWISE.
2. EMBEDDED PENETRATION TUBING OR PIPE TO EXTEND 6" BEYOND THE WALL ON BOTH SIDES.
3. HELIUM RECIRC RETURN PENETRATION TO BE SUPPLIED WITH AN ELBOW TURNED UP FOR FUTURE CONNECTION.
4. SEE MERRICK DWG J9.20.33 FOR ADDITIONAL INFORMATION.

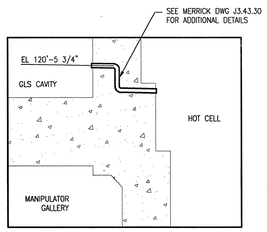

SECTION C
SCALE 1/4"= 1'-0" U6.10.35

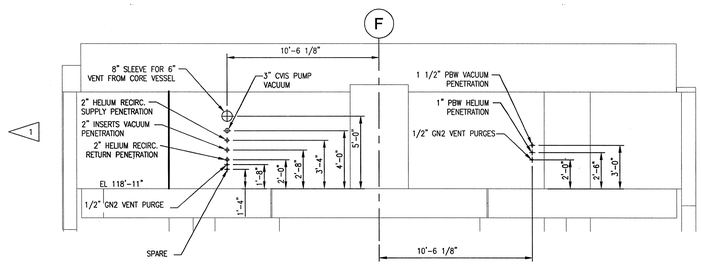

SECTION D
SCALE 1/4"=1'-0" U6.10.32

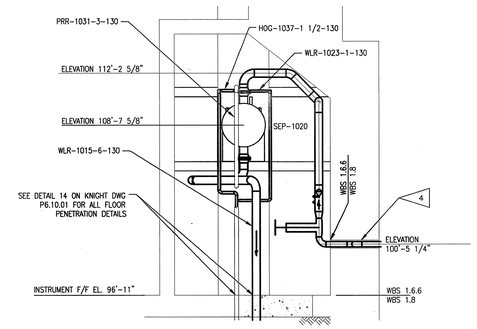

SECTION E
SCALE 1/4"=1'-0" U6.10.33

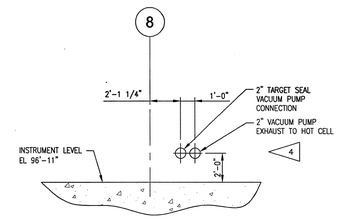

SECTION F
SCALE 1/4"=1'-0" U6.10.33

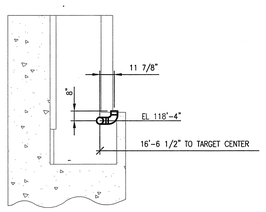

SECTION G
SCALE 1/4"= 1'-0" U6.10.32

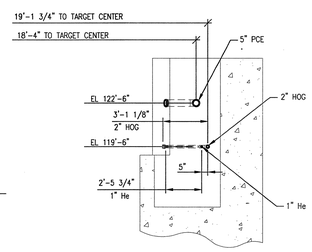

SECTION H
SCALE 1/4"= 1'-0" U6.10.32

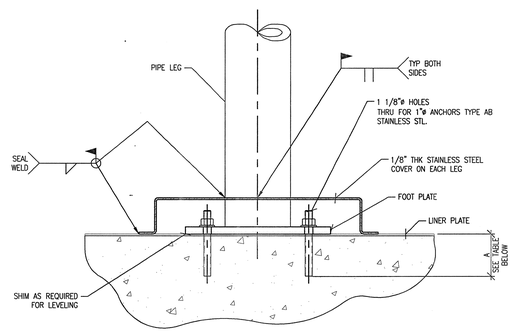

DETAIL 1
SCALE: 3"=1'-0" U6.10.31

TANK	SIZE ø	(A) MINIMUM DEPTH
TK-2010	1"ø	8.25"
TK-9310	1"ø	8.25"
TK-2510	1"ø	12.375"
TK-1510	1"ø	8.25"
TK-1030	1"ø	8.25"

1/4" = 1'-0" 4' 2' 0 4' 8'

NO REPRESENTATION OR WARRANTY, EXPRESSED OR IMPLIED, IS MADE AS TO THE ACCURACY, COMPLETENESS OR USEFULNESS OF THE INFORMATION OR STATEMENTS CONTAINED IN THESE DRAWINGS, OR THAT THE USE OR DISCLOSURE OF ANY INFORMATION, APPARATUS, METHOD, OR PROCESS DISCLOSED IN THESE DRAWINGS MAY NOT INFRINGE PRIVATE RIGHTS OF OTHERS. NO LIABILITY IS ASSUMED WITH RESPECT TO THE USE OF, OR FOR DAMAGES RESULTING FROM THE USE OF ANY INFORMATION, APPARATUS, METHOD, OR PROCESS DISCLOSED IN THESE DRAWINGS. DRAWINGS MADE AVAILABLE FOR INFORMATION TO BIDDER ARE NOT TO BE USED FOR OTHER PURPOSES AND ARE TO BE RETURNED UPON REQUEST OF THE FORWARDING CONTRACTOR.

NUMBER OF SECTION OR DETAIL — DRAWING ON WHICH SECTION OR DETAIL IS SHOWN OR TAKEN
SECTION AND DETAIL KEY

THIS DOCUMENT CONTROLLED BY
CHANGE CONTROL SYSTEM 3
ENGINEERING PROCEDURE SNS-ENG-0001

REV	CHANGE TYPE	CHANGE CONTROL SYSTEM	CHANGE REQUEST NUMBER	DESCRIPTION	DSN	CHK	DEPT	DATE	PE	DATE	PJ	DATE	REQ	DATE	UTB	DATE	RPE	RPE NO	DATE	ST	CV	EC	EE	EM	IE	M	PD	SE	AR
0				CERTIFIED FOR CONSTRUCTION - 10/26/01	TP	RLW											TP	100946	11/13/01	REW		WRS	AK	WRS	BWJ		MP		ED

REVISION OR ISSUE PURPOSE — REVISION APPROVALS — SQUAD CHECK

RPE			
	DSN	T. PROFFITT	10/26/01
	DRW	H.M. MAPLES	10/26/01
	CHK	R. WITHERSPOON	10/26/01
	DEPT		
	PE		11/15/01
	PJ		11/14/01
	REQ		
REV. ø DATE 11/13/01	UTB		11/14/01

DRAWING APPROVALS

108030700-U8E-8700-A005

Knight/Jacobs Joint Venture
701 Scarboro Road, MS 8253
Oak Ridge, TN 37830
865-241-9433
fax 865-241-3400

Sverdrup Technology, Inc.
Tullahoma, TN 37388

UT-BATTELLE
Oak Ridge National Laboratory
managed for the DEPARTMENT OF ENERGY under U.S. GOVERNMENT contract DE-AC05-00OR22725
UT-BATTELLE, LLC, ◆ Oak Ridge, Tennessee

PROJECT NAME:
SPALLATION NEUTRON SOURCE
TARGET UTILITY BUILDING
PENETRATONS SECTIONS AND DETAILS
BASEMENT AND HIGH BAY LEVELS

1	48	49	50	PLANT	BLDG	FL	SH.	OF	TYPE	CLASS
3	U	X	X	8	8700		1	1	S	U
51	52		53	WBS						REV
NC	NA			1.8.3.7	U6.10.34					0

P:\00618\DRAWINGS\ISSUED\MECH\8700\1.8\01-10-26 (CFC)\BOUND\U6.10.34DWG2001 14:51 tcrmsajh