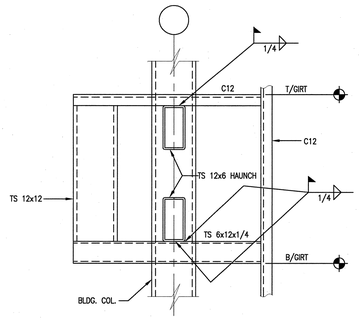


12 ELEVATION DETAIL
S5.10.39 SCALE: 3/4"=1'-0" SDT051038-5A

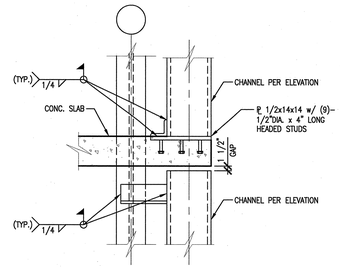


9 TUBE STEEL SPLICE
S5.10.39 SCALE: 3/4"=1'-0" SDT051038-5A

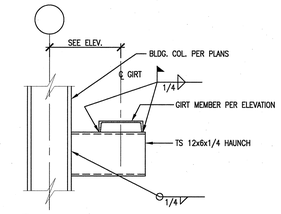


5 SECTION
S5.10.39 SCALE: 3/4"=1'-0" SDT051038-5A

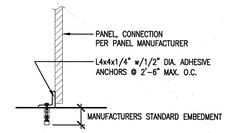


1 TYPICAL PANEL BASE
VERTICAL & HORIZONTAL SPANNING PANEL
S5.10.39 SCALE: 3/4"=1'-0" SDT051038-5A

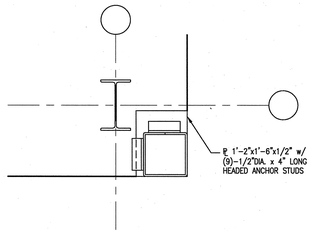


13 VERTICAL GIRT @ CORNER
S5.10.39 SCALE: 3/4"=1'-0" SDT051038-5A

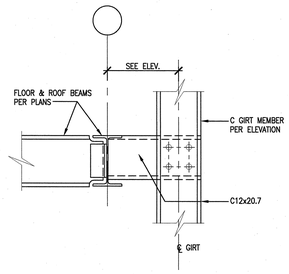


10 SECTION (TYP. TIE-BACK CHANNEL GIRT)
S5.10.39 SCALE: 3/4"=1'-0" SDT051038-5A

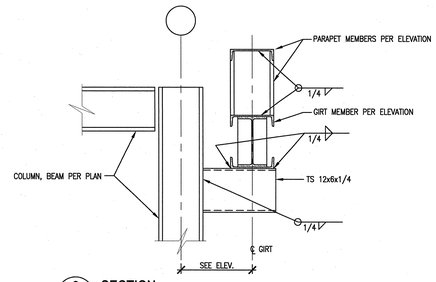


6 SECTION
S5.10.39 SCALE: 3/4"=1'-0" SDT051038-5A

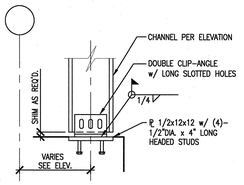


2 TYPICAL CHANNEL BASE
S5.10.39 SCALE: 3/4"=1'-0" SDT051038-5A

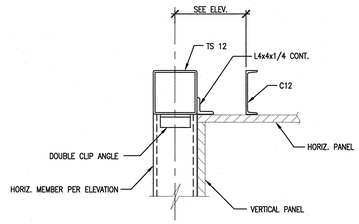


14 CORNER TRANSITION - VERT. TO HORIZ.
S5.10.39 SCALE: 3/4"=1'-0" SDT051038-5A

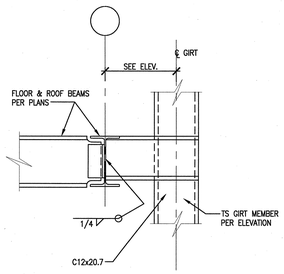


11 SECTION (TYP. TIE-BACK TS GIRT)
S5.10.39 SCALE: 3/4"=1'-0" SDT051038-5A

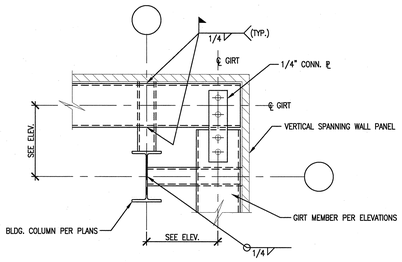


7 PLAN DETAIL
S5.10.39 SCALE: 3/4"=1'-0" SDT051038-5A

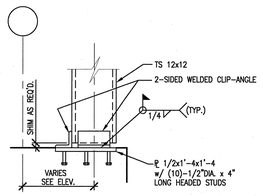


3 TYPICAL TUBE STEEL BASE
S5.10.39 SCALE: 3/4"=1'-0" SDT051038-5A

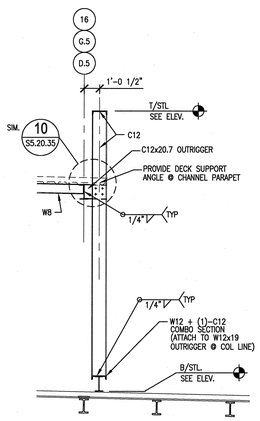


16 TYP ICAL HIGH ROOF SECTION AT PARAPET
S5.20.34 SCALE : 1/4"=1'-0" SDT051037-5A

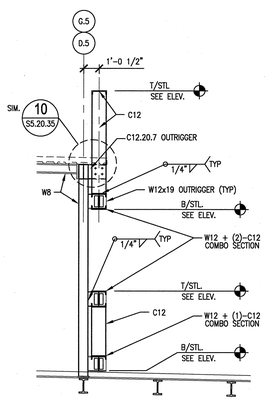


15 HIGH ROOF SECTION AT LOUVER
S5.20.34 SCALE : 1/4"=1'-0" SDT051037-5A

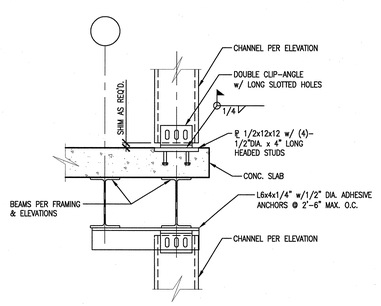


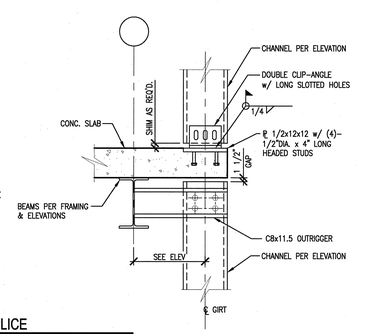


8 CHANNEL SPLICE
S5.10.39 SCALE: 3/4"=1'-0" SDT051038-5A

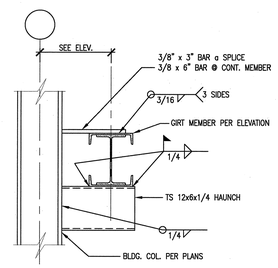


4 SECTION
S5.10.39 SCALE: 3/4"=1'-0" SDT051038-5A

1' 6" 0 1' 2'
SCALE: 3/4" = 1'-0"

108030700-S8E-8700-A105

Knight/Jacobs
Knight/Jacobs Joint Venture
701 Scarboro Road, MS 8253
Oak Ridge, TN 37830
865-241-9433
fax 865-241-3400

KNIGHT
Knight Advanced Technology
540 West Randolph Street
Chicago, IL 60661

UT-BATTELLE
Oak Ridge National Laboratory
managed for the DEPARTMENT OF ENERGY under
U.S. GOVERNMENT contract DE-AC05-00OR22725
UT-BATTELLE LLC. • Oak Ridge, Tennessee

PROJECT NAME:
SPALLATION NEUTRON SOURCE
TARGET BUILDING
TYPICAL GIRT DETAILS

| | | | | | | | | | | | |
|---|---|---|---|---|---|---|---|---|---|---|---|
| 1 | 48 | 49 | 50 | PLANT | BLDG | FL | SH. | OF | TYPE | CLASS |
| 3 | S | X | X | 8 | 8700 | | 1 | 1 | S | U |
| 51 | | 52 | | 53 | WBS | | S5.20.35 | | | REV |
| NC | | NA | | | 1.8.3.7 | | | | | 0 |

| | | |
|---|---|---|
| DSN | G. REDDY | 10/26/01 |
| DRW | T. DEADY | 10/26/01 |
| CHK | R.WALKINGTON | 10/26/01 |
| DEPT | | |
| PE | | 11/13/01 |
| PJ | R A Dean | 11/13/01 |
| REQ | | |
| UTB | | 11/13/01 |

RPE: JOHN BURCHFIELD, REGISTERED ENGINEER, AGRICULTURE, LICENSE NO. 23236, STATE OF TENNESSEE
REV. 0 DATE 10/26/01
DRAWING APPROVALS

| REV | CHANGE TYPE | CHANGE CONTROL SYSTEM | CHANGE REQUEST NUMBER | DESCRIPTION | DSN | CHK | DEPT |
|---|---|---|---|---|---|---|---|
| 0 | | | | CERTIFIED FOR CONSTRUCTION – 10/26/01 | GPR | REW | |

REVISION OR ISSUE PURPOSE

| DATE | PE | DATE | PJ | DATE | REQ | DATE | UTB | DATE | RPE | RPE NO | DATE |
|---|---|---|---|---|---|---|---|---|---|---|---|
| | GPR | 11/6/01 | RPD | 11/13/01 | | | DMT | 11/13/01 | JJB | 23236 | 10/26/01 |

REVISION APPROVALS

| REW | – | WRS | AK | WRS | BWJ | – | MP | – | ED |
|---|---|---|---|---|---|---|---|---|---|
| ST | CV | EC | EE | EM | IE | M | PD | SE | AR |

SQUAD CHECK

NO REPRESENTATION OR WARRANTY, EXPRESSED OR IMPLIED, IS MADE AS TO THE ACCURACY, COMPLETENESS OR USEFULNESS OF THE INFORMATION OR STATEMENTS CONTAINED IN THESE DRAWINGS, OR THAT THE USE OR DISCLOSURE OF ANY INFORMATION, APPARATUS, METHOD, OR PROCESS DISCLOSED IN THESE DRAWINGS MAY NOT INFRINGE PRIVATE RIGHTS OF OTHERS. NO LIABILITY IS ASSUMED WITH RESPECT TO THE USE OF, OR FOR DAMAGES RESULTING FROM THE USE OF ANY INFORMATION, APPARATUS, METHOD, OR PROCESS DISCLOSED IN THESE DRAWINGS. DRAWINGS MADE AVAILABLE FOR INFORMATION TO BIDDER ARE NOT TO BE USED FOR OTHER PURPOSES AND ARE TO BE RETURNED UPON REQUEST OF THE FORWARDING CONTRACTOR.

NUMBER OF SECTION OR DETAIL
DRAWING ON WHICH SECTION OR DETAIL IS SHOWN OR TAKEN
SECTION AND DETAIL KEY

THIS DOCUMENT CONTROLLED BY
CHANGE CONTROL SYSTEM 3
ENGINEERING PROCEDURE SNS-ENG-G001

AutoCAD
Date: 10/24/2001 Time: 13:09:22
Username: WARCKSBIG/
Filename: J:\PROJ\PROJECTS\TARGET\TGTBLD\GIRT\GIRT_SA\S5.20.35.DWG