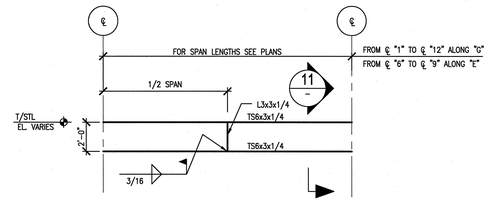

12 TYPICAL PIPE SUPPORT FRAMING ELEVATION
SCALE: NO SCALE SDT051003-5A

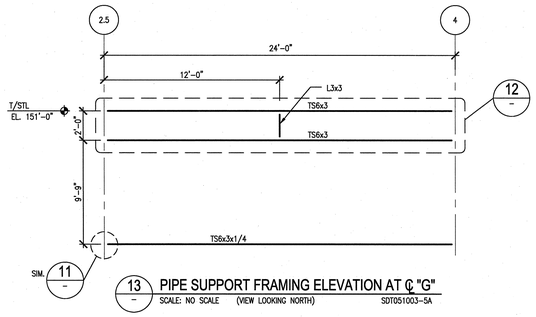

13 PIPE SUPPORT FRAMING ELEVATION AT ℄ "G"
SCALE: NO SCALE (VIEW LOOKING NORTH) SDT051003-5A

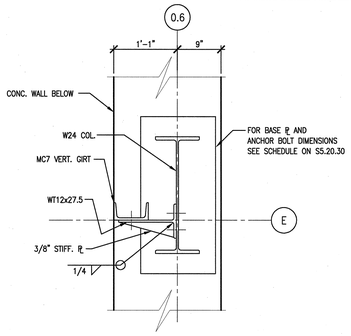

9 PLAN - VERTICAL GIRT CONN. TO COL.
S5.10.37 SCALE: 1"=1'-0" SDT051001-5A

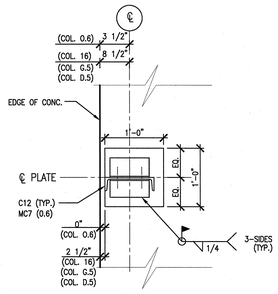

PLAN

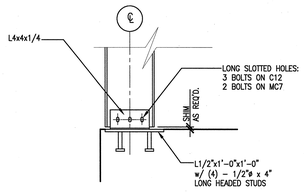

SECTION

10 TYP. VERTICAL GIRT BASE PLATE
S5.10.37 SCALE: 1"=1'-0" SDT051001-5A

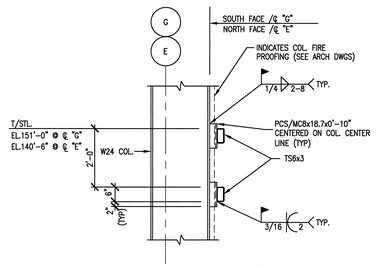

11 TYPICAL SECTION
SCALE: 1/2"=1'-0" SDT051017-5A

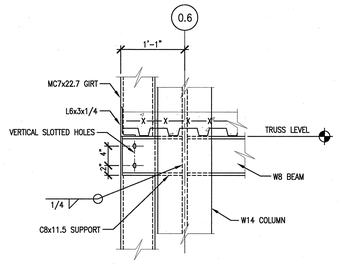

(BEAM NOT SHOWN FOR CLARITY)

5 GIRT SUPPORT @ COLUMN
S2.04.42 SCALE: 1"=1'-0" SDT051001-5A

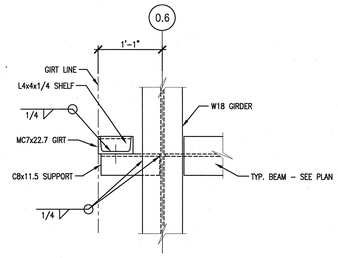

(DECK NOT SHOWN FOR CLARITY)

6 GIRT SUPPORT - PLAN
S2.04.42 SCALE: 1"=1'-0" SDT051001-5A

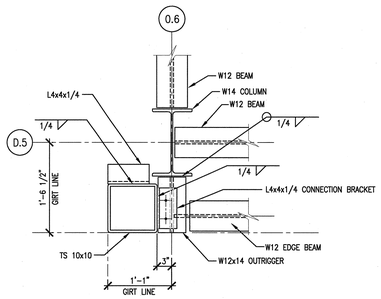

(DECK NOT SHOWN FOR CLARITY)

7 GIRT SUPPORT @ CORNER - PLAN
S2.04.43 SCALE: 1"=1'-0" SDT051001-5A

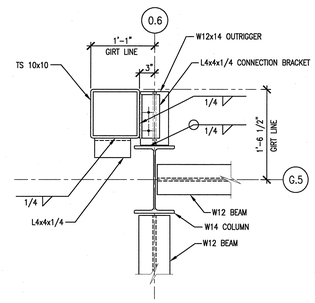

(DECK NOT SHOWN FOR CLARITY)

8 GIRT SUPPORT @ CORNER - PLAN
S2.04.41 SCALE: 1"=1'-0" SDT051001-5A

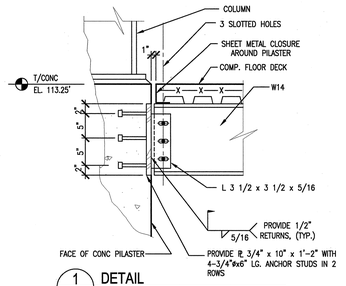

1 DETAIL
S2.02.41 SCALE: 1"=1'-0" SDT051001-5A
S2.02.43

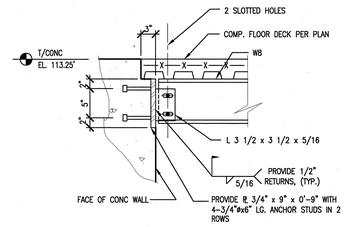

2 DETAIL
S2.02.41 SCALE: 1"=1'-0" SDT051001-5A
S2.02.43

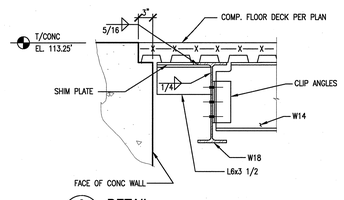

3 DETAIL
S4.21.38 SCALE: 1"=1'-0" SDT051001-5A

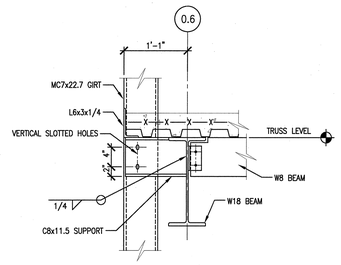

4 GIRT SUPPORT MID-SPAN OF BEAM
S2.04.42 SCALE: 1"=1'-0" SDT051001-5A

1' 0 1' 2'
SCALE 1" = 1'-0"

108030700-S8E-8700-A101

Knight/Jacobs Joint Venture
701 Scarboro Road, MS 8253
Oak Ridge, TN 37830
865-241-9433
fax 865-241-3400

KNIGHT
Knight Advanced Technology
549 West Randolph Street
Chicago, IL 60661

UT-BATTELLE
Oak Ridge National Laboratory
managed for the DEPARTMENT OF ENERGY under
U.S. GOVERNMENT contract DE-AC05-00OR22725
UT-BATTELLE, LLC, ® Oak Ridge, Tennessee

DSN	G. REDDY	10/26/01
DRW	G.MARSZALEK	10/26/01
CHK	R.WALKINGTON	10/26/01
DEPT		
PE	R.J. Bellen	11/13/01
PJ	R.A. Dean	11/13/01
REQ		
UTB	R.J. Guzman	11/13/01

RPE
JOHN BUSCHER
REGISTERED ENGINEER
AGRICULTURE
COMMERCE
NO. 23336
STATE OF TENNESSEE
REV. 0 DATE 10/26/01
DRAWING APPROVALS

PROJECT NAME:
SPALLATION NEUTRON SOURCE

TARGET BUILDING
SECTIONS AND DETAILS

1	48	49	50	PLANT	BLDG	FL	SH.	OF	TYPE	CLASS
3	S	X	X	8	8700		1	1	S	U
51		52		53	WBS					REV
NC		NA			1.8.3.7		S5.20.34			0

REV	CHANGE TYPE	CHANGE CONTROL SYSTEM	CHANGE REQUEST NUMBER	DESCRIPTION	DSN	CHK	DEPT
0				CERTIFIED FOR CONSTRUCTION - 10/26/01	GPR	REW	

REVISION OR ISSUE PURPOSE

DATE	PE	DATE	PJ	DATE	REQ	DATE	UTB	DATE	RPE	RPE NO	DATE
	RJB	11/13/01	RAD	11/13/01			RJG	11/13/01	JJB	23336	10/26/01

REVISION APPROVALS

REW	–	WRS	AK	WRS	BWJ	–	MP	–	ED
ST	CV	EC	EE	EM	IE	M	PD	SE	AR

SQUAD CHECK

NO REPRESENTATION OR WARRANTY, EXPRESSED OR IMPLIED, IS MADE AS TO THE ACCURACY, COMPLETENESS OR USEFULNESS OF THE INFORMATION OR STATEMENTS CONTAINED IN THESE DRAWINGS, OR THAT THE USE OR DISCLOSURE OF ANY INFORMATION, APPARATUS, METHOD, OR PROCESS DISCLOSED IN THESE DRAWINGS MAY NOT INFRINGE PRIVATE RIGHTS OF OTHERS. NO LIABILITY IS ASSUMED WITH RESPECT TO THE USE OF, OR FOR DAMAGES RESULTING FROM THE USE OF ANY INFORMATION, APPARATUS, METHOD, OR PROCESS DISCLOSED IN THESE DRAWINGS. DRAWINGS MADE AVAILABLE FOR INFORMATION TO BIDDER ARE NOT TO BE USED FOR OTHER PURPOSES AND ARE TO BE RETURNED UPON REQUEST OF THE FORWARDING CONTRACTOR.

NUMBER OF SECTION OR DETAIL
DRAWING ON WHICH SECTION OR DETAIL IS SHOWN OR TAKEN
SECTION AND DETAIL KEY

THIS DOCUMENT CONTROLLED BY
CHANGE CONTROL SYSTEM 3
ENGINEERING PROCEDURE SNS-ENG-0001

Date: 10/26/2001 Time: 13:01:07
Drawing: S5.20.34.DWG
CD-ROM:[ANDRUSZKO.7000]R13D_CADD]CADD_SA]TAR_PLOT]S5-20-34.DWG

AutoCAD