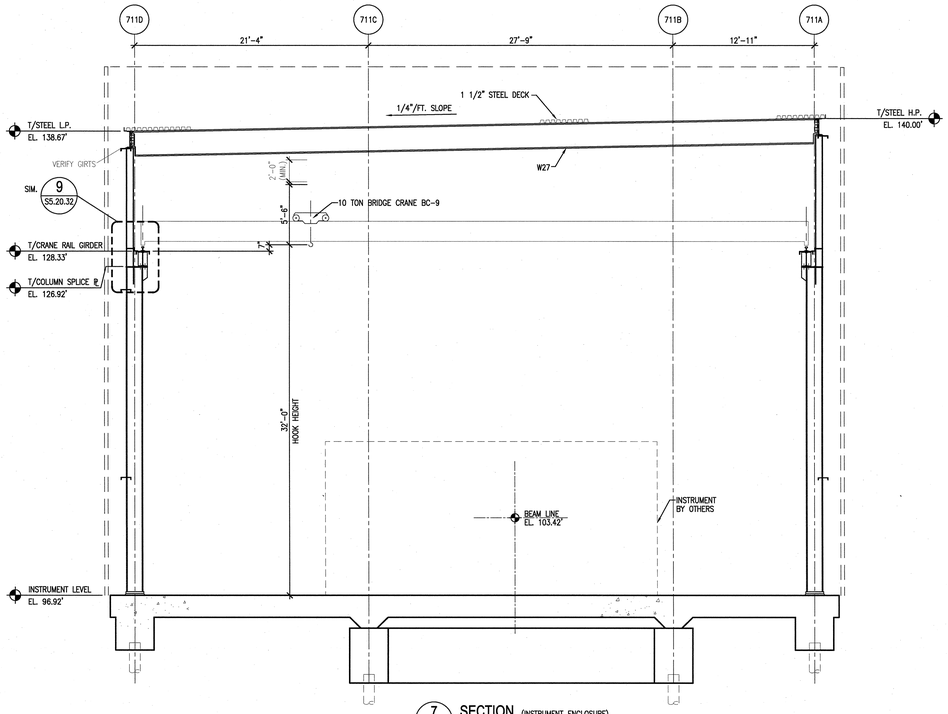

7 S2.09.56 **SECTION** (INSTRUMENT ENCLOSURE)
SCALE: 3/16"=1'-0" SSC004A-5A

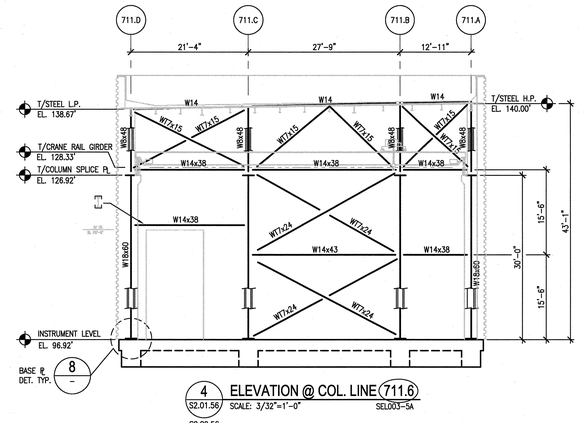

4 S2.01.56 **ELEVATION @ COL. LINE 711.6**
SCALE: 3/32"=1'-0" SEL003-5A
S2.09.56

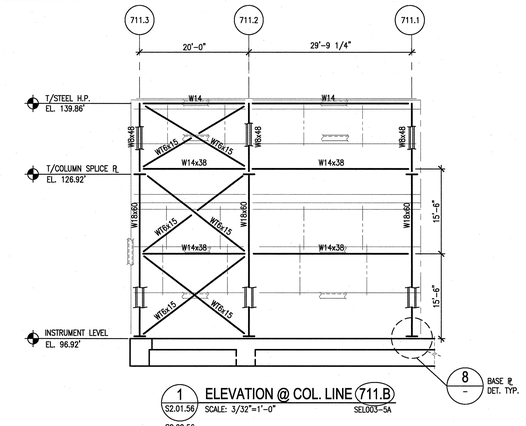

1 S2.01.56 **ELEVATION @ COL. LINE 711.B**
SCALE: 3/32"=1'-0" SEL003-5A
S2.09.56

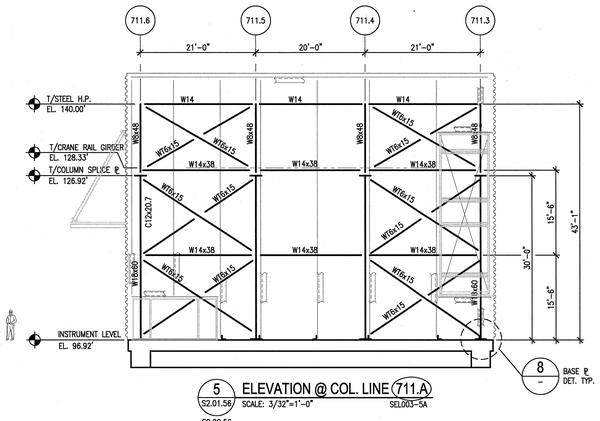

5 S2.01.56 **ELEVATION @ COL. LINE 711.A**
SCALE: 3/32"=1'-0" SEL003-5A
S2.09.56

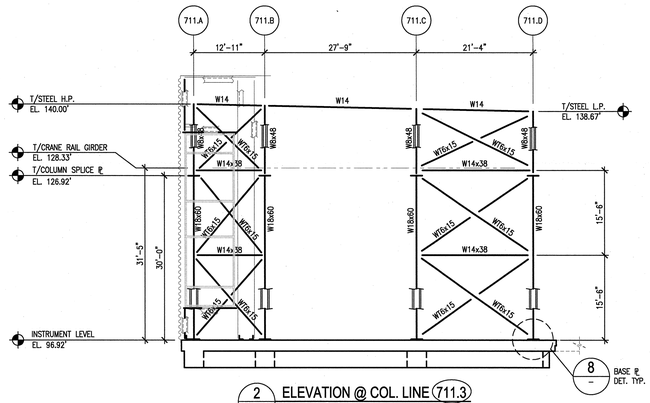

2 S2.01.56 **ELEVATION @ COL. LINE 711.3**
SCALE: 3/32"=1'-0" SEL003-5A
S2.09.56

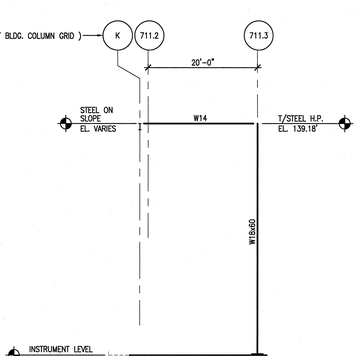

10 S2.01.56 **ELEVATION @ COL. LINE 711.C**
SCALE: 3/32"=1'-0" SEL003-5A
S2.09.56

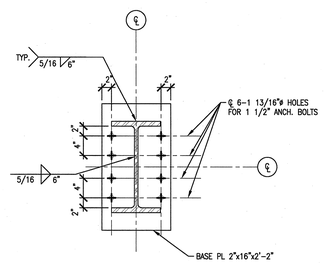

8 S5.20.31 **BASE PLATE DETAIL FOR W18x60 CRANE COLUMN**
SCALE : NONE SDT05106-5A
NOTE: 1. BOTTOM/BASE PLATE EL.+97'-0"

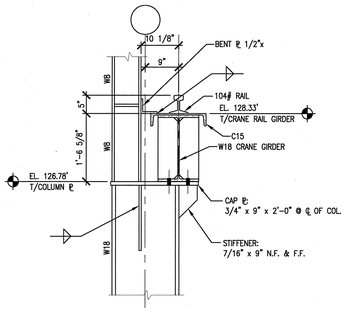

9 S5.20.32 **DETAIL**
SCALE: 3/4"=1'-0" SDT051029-5A

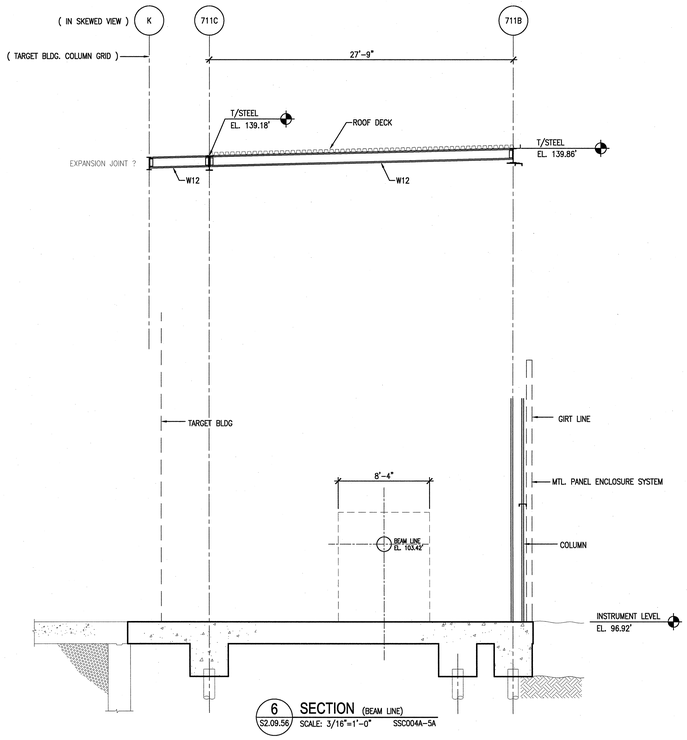

6 S2.09.56 **SECTION** (BEAM LINE)
SCALE: 3/16"=1'-0" SSC004A-5A

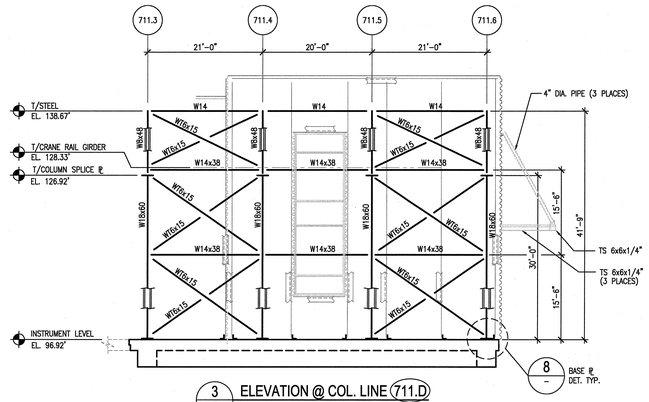

3 S2.01.56 **ELEVATION @ COL. LINE 711.D**
SCALE: 3/32"=1'-0" SEL003-5A
S2.09.56

1' 6" 0 1' 2'
SCALE: 3/4" = 1'-0"

4' 2' 0 4' 8' 16'
SCALE: 3/16" = 1'-0"

10' 0 10' 20'
SCALE: 3/32" = 1'-0"

NO REPRESENTATION OR WARRANTY, EXPRESSED OR IMPLIED, IS MADE AS TO THE ACCURACY, COMPLETENESS OR USEFULNESS OF THE INFORMATION OR STATEMENTS CONTAINED IN THESE DRAWINGS, OR THAT THE USE OR DISCLOSURE OF ANY INFORMATION, APPARATUS, METHOD, OR PROCESS DISCLOSED IN THESE DRAWINGS MAY NOT INFRINGE PRIVATE RIGHTS OF OTHERS. NO LIABILITY IS ASSUMED WITH RESPECT TO THE USE OF, OR FOR DAMAGES RESULTING FROM THE USE OF ANY INFORMATION, APPARATUS, METHOD, OR PROCESS DISCLOSED IN THESE DRAWINGS. DRAWINGS MADE AVAILABLE FOR INFORMATION TO BIDDER ARE NOT TO BE USED FOR OTHER PURPOSES AND ARE TO BE RETURNED UPON REQUEST OF THE FORWARDING CONTRACTOR.

NUMBER OF SECTION OR DETAIL
DRAWING ON WHICH SECTION OR DETAIL IS SHOWN OR TAKEN
SECTION AND DETAIL KEY

THIS DOCUMENT CONTROLLED BY
CHANGE CONTROL SYSTEM 3
ENGINEERING PROCEDURE SNS-ENG-0001

REV	CHANGE TYPE	CHANGE CONTROL SYSTEM	CHANGE REQUEST NUMBER	DESCRIPTION	DSN	CHK	DEPT
0				CERTIFIED FOR CONSTRUCTION – 10/26/01	GPR	REW	

REVISION OR ISSUE PURPOSE

DATE	PE	DATE	PJ	DATE	REQ	DATE	UTB	DATE	RPE	RPE NO	DATE
	RPD 11/15/01	RPD	11/15/01				11/15/01		JJB	23236	10/26/01

REVISION APPROVALS

ST	CV	EC	EE	EM	IE	M	PD	SE	AR
REW	–	WRS	AK	WRS	BWJ	–	MP	–	ED

SQUAD CHECK

RPE
JOHN BUSCHER REGISTERED ENGINEER AGRICULTURE COMMERCE STATE OF TENNESSEE NO. 23236
REV. 0 DATE 10/26/01

DSN	G. REDDY	10/26/01
DRW	G.MARSZALEK	10/26/01
CHK	R.WALKINGTON	10/26/01
DEPT		
PE	RD Denton	11/15/01
PJ	RA Dean	11/15/01
REQ		
UTB	JJ Hudson	11/15/01

DRAWING APPROVALS

108030700-S8E-8711-A004

Knight// Jacobs
Knight/Jacobs Joint Venture
701 Scarboro Road, MS 8253
Oak Ridge, TN 37830
865-241-9433
fax 865-241-3400

KNIGHT
Knight Advanced Technology
549 West Randolph Street
Chicago, IL 60661

UT-BATTELLE
Oak Ridge National Laboratory
managed for the DEPARTMENT OF ENERGY under
U.S. GOVERNMENT contract DE-AC05-00OR22725
UT-BATTELLE, LLC, © Oak Ridge, Tennessee

PROJECT NAME:
SPALLATION NEUTRON SOURCE
BUILDING 11TU
STEEL SECTIONS AND DETAILS
SECTOR 56

1	48	49	50	PLANT	BLDG	FL	SH.	OF	TYPE	CLASS
3	S	X	X	8	8711		1	1	S	U
51		52		53	WBS					REV
NC		NA			1.8.3.7		S5.20.32			0

AutoCAD

Date: 10/24/2001 Time: 13:03:24
Username: GMARSZ
C:\R_WILD\PROJECTS\7800\700_0600\NGK-SAT\40_PLOT\20-3D-3D.DWG