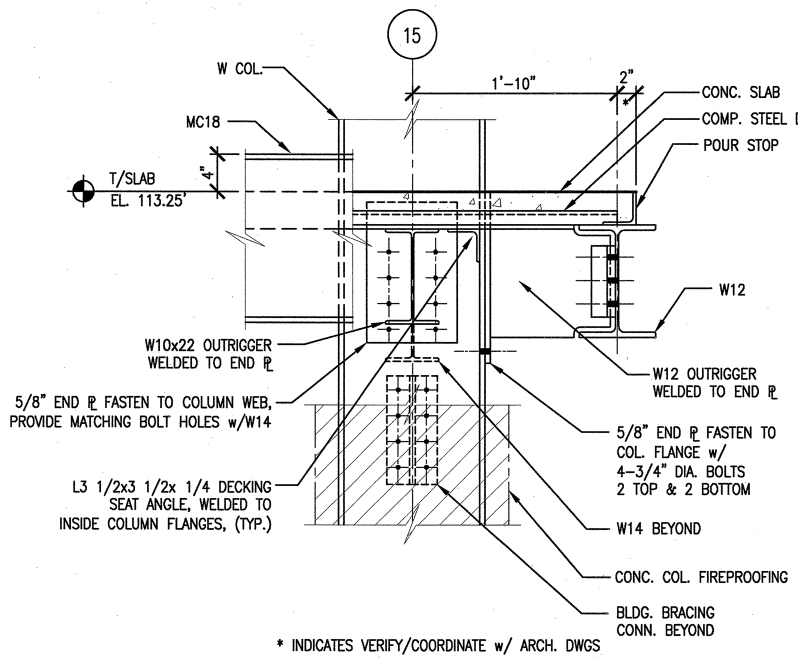

* INDICATES VERIFY/COORDINATE w/ ARCH. DWGS

20 SECTION (S2.02.47) SCALE: 1"=1'-0" SDT051001-5A
S2.02.49

COLUMN BASE PLATE SCHEDULE

COLUMN LINES	BASE PLATE DIMENSIONS	ANCHOR BOLTS (A-325)	T/ BASE PLATE ELEVATION
A1, A2.5, A4, A5, A6, A7, A8, A9, A10, A11, A12, A13, A14, A15	2'-8" x 1'-8" x 2"	6 – 1 1/2" DIA. x 2'-6" LG.	97'-3"
B15, C15, D15, D.5-16, G.5-16	1'-8" x 1'-0" x 1 1/4"	4 – 1 1/2" DIA. x 2'-6" LG.	97'-3"
E.5-4, E.6-6, E16, F.6-4, F.5-6, G16	2'-8" x 1'-8" x 2"	6 – 1 1/2" DIA. x 2'-6" LG.	97'-3"
F12, F13	1B 2'-2 1/4" x 2'-2" x 3"	4 – 1" DIA. x 2'-3" LG.	97'-4"
I15, J15, H15	2'-0" x 1'-0" x 1"	4 – 1" DIA. x 2'-3" LG.	97'-2"
E1, E2.5	4'-0" x 2'-0" x 2 3/4"	6 – 1 3/4" DIA. x 3'-0" LG	97'-4"
E7, E8, E9, E10, E11	4'-0" x 2'-0" x 3"	6 – 2" DIA. x 3'-3" LG.	97'-4"
E12, E13, E14, E15	4'-0" x 2'-0" x 3"	6 – 2" DIA. x 3'-3" LG.	97'-4"
G1, G2.5	4'-0" x 2'-0" x 2 3/4"	6 – 1 3/4" DIA. x 3'-0" LG.	97'-4"
G7, G8, G9, G10, G11	4'-0" x 2'-0" x 3"	6 – 2" DIA. x 3'-3"	97'-4"
G12, G13, G14, G15	4'-0" x 2'-0" x 3"	6 – 2" DIA. x 3'-3"	97'-4"
K2.5, K4, K5, K6, K7, K8, K9, K10, K11, K12, K13, K14, K15	2'-8" x 1'-8" x 2"	6 – 1 1/2" DIA. x 2'-6"	97'-3"
–	–	–	–
C1	1'-8" x 1'-0" x 1 1/4"	4 – 1 1/2" DIA. x 2'-6" LG.	113'-7"
D1, H1	1B 1'-8" x 1'-0" x 1 1/4"	4 – 1 1/2" DIA. x 2'-6" LG.	113'-7"
I1, J1	1'-2" x 1'-10" x 1 1/2"	4 – 1" DIA. x 2'-3" LG.	113'-6"
K1	2'-8' x 1'-8' x 2"	6 – 1 1/2" DIA. x 2'-6" LG.	97'-3"
B1	1B 1'-8" x 1'-0" x 1 1/4"	4 – 1 1/2" DIA. x 2'-6" LG.	113'-7"
D.5-0.6, G.5-0.6	1'-6" x 1'-0" x 1/2"	4 – 1" DIA. x 2'-3" LG.	134'-2"
B-11.6, B-12, B-13, B-14, C.7-2 D.3-2, J.1-2, J-11.6, J-12, J-13 J-14, J.5-2	1'-0" x 1'-0" x 3/4"	4 – 1" DIA. x 2'-3" LG.	97'-1"
CHOPPER COLUMNS 20 NOS	1'-2" x 3'-2" x 3 1/2"	4 – 1 1/2" DIA.	97'-0"
E-0.6, G-0.6	2'-8' x 1'-8' x 1"	6 – 1 1/2" DIA. x 2'-6" LG.	97'-2"
F15, F16	1'-2" x 1'-10" x 1 1/2"	4 – 1" DIA. x 2'-3" LG.	97'-3"
D.5-16, G.5-16, G.5-15.5	1'-2" x 1'-10" x 1 1/2"	4 – 1" DIA. x 2'-3" LG.	97'-3"

NOTE: SEE DETAIL 15 & 16
SDT05103-5A

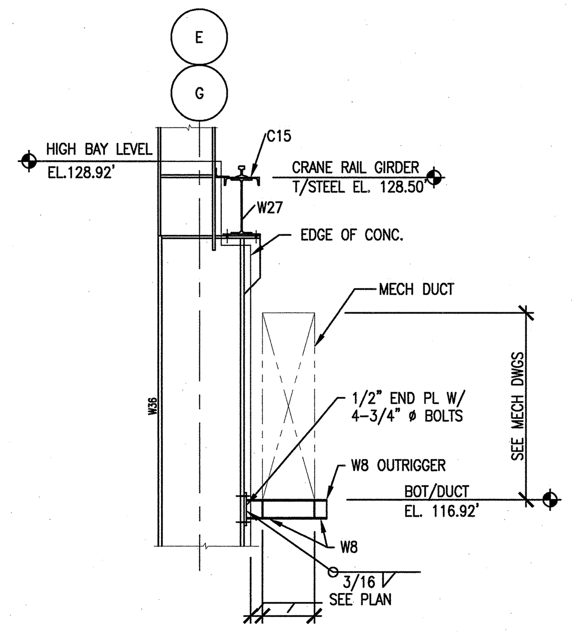

9 TYPICAL DUCT SUPPORT SECTION (S2.02.42) SCALE: 1/2"=1'-0" SDT051003-5A
S2.02.45, S2.02.48

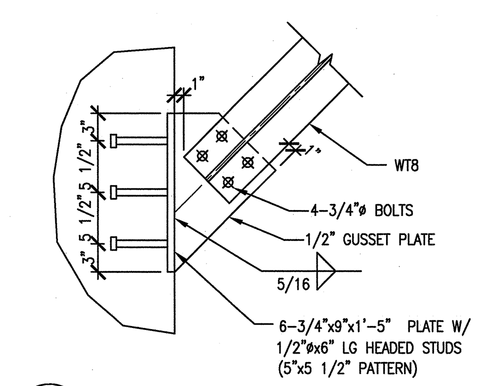

5 SECTION (S4.21.38) SCALE: 1"=1'-0" SDT051001-5A

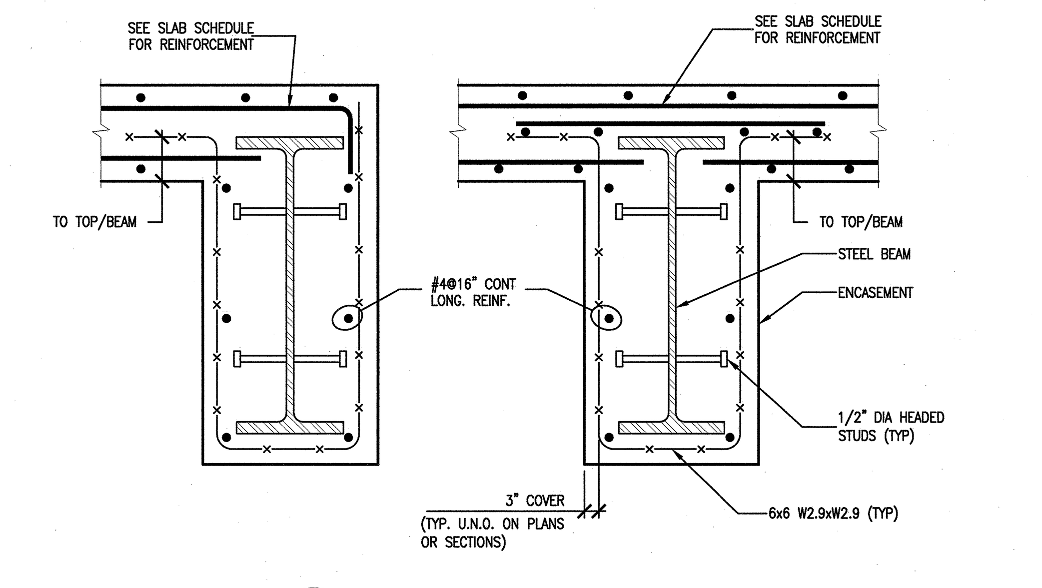

1 TYPICAL BEAM ENCASEMENT (S2.03.45) SCALE: NONE SDT051014-5A
S2.03.42
S2.03.48

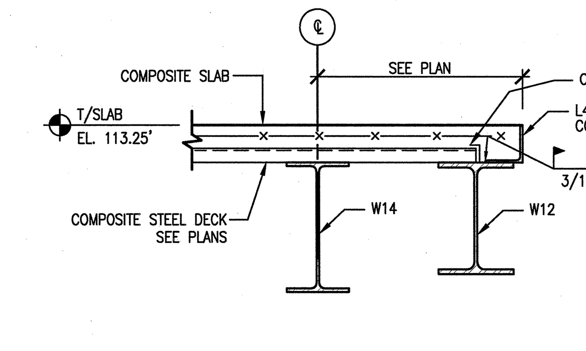

6 SECTION (S2.02.47) SCALE: 1"=1'-0" SDT051016-5A
S2.02.48
S2.02.49

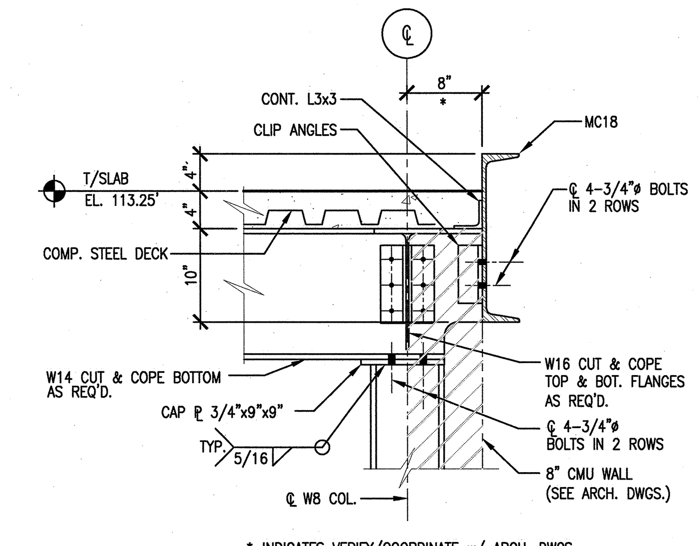

* INDICATES VERIFY/COORDINATE w/ ARCH. DWGS

2 SECTION (S2.02.47) SCALE: 1"=1'-0" SDT051001-5A
S2.02.49

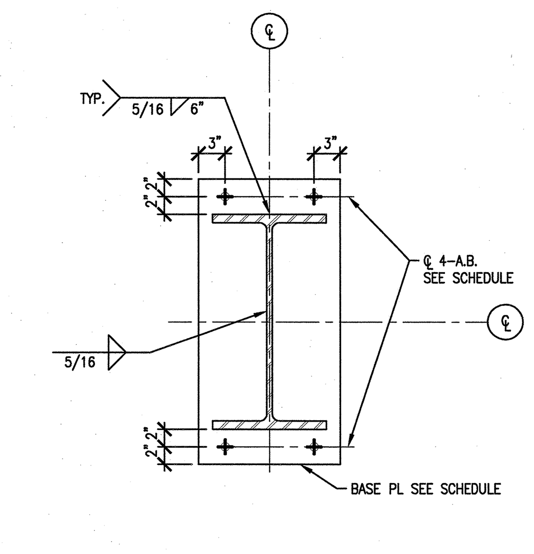

15 BASE PLATE DETAIL FOR W24 COLUMN (–) SCALE : NONE SDT05106-5A
NOTE: 1. BOTTOM/BASE PLATE EL.+97'-0"

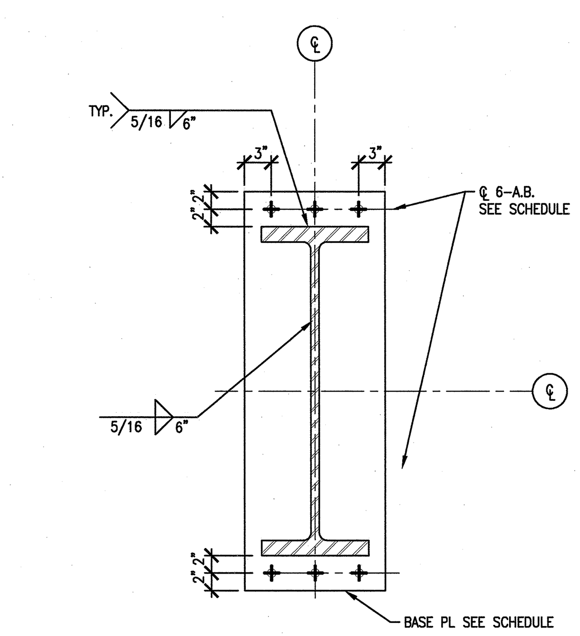

16 BASE PLATE DETAIL FOR 36 COLUMN (–) SCALE : NONE SDT05106-5A
NOTE: 1. BOTTOM/BASE PLATE EL.+97'-0"

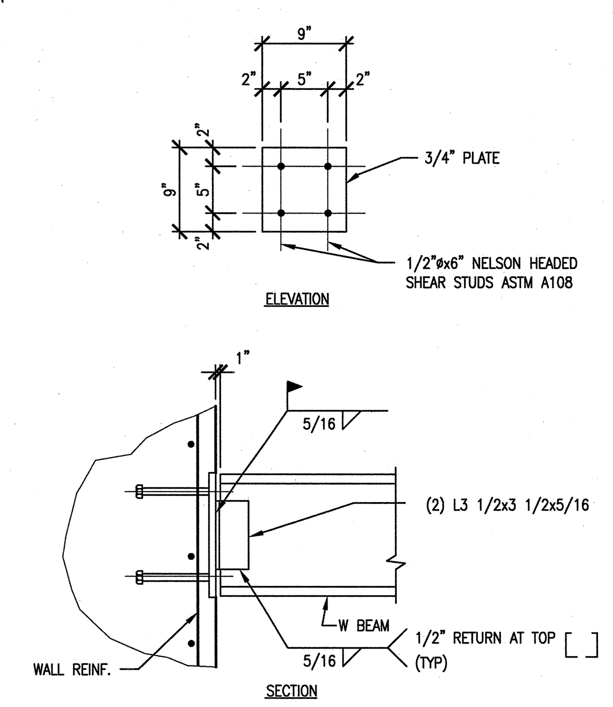

10 EMBEDDED PLATE DETAIL (S2.B1.48) SCALE: NONE SDT051001-5A

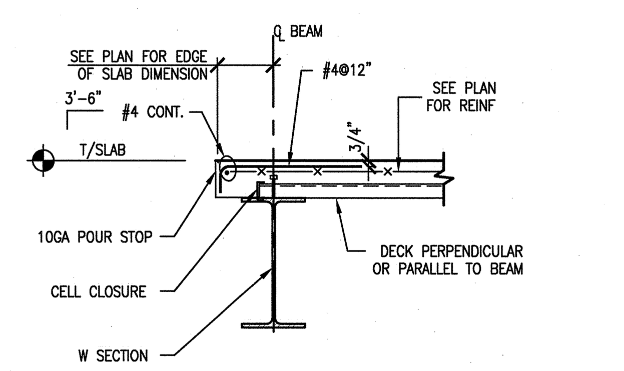

7 TYPICAL SLAB EDGE (U.N.O.) (S2.03.48) SCALE: 1"=1'-0" SDT051016-5A

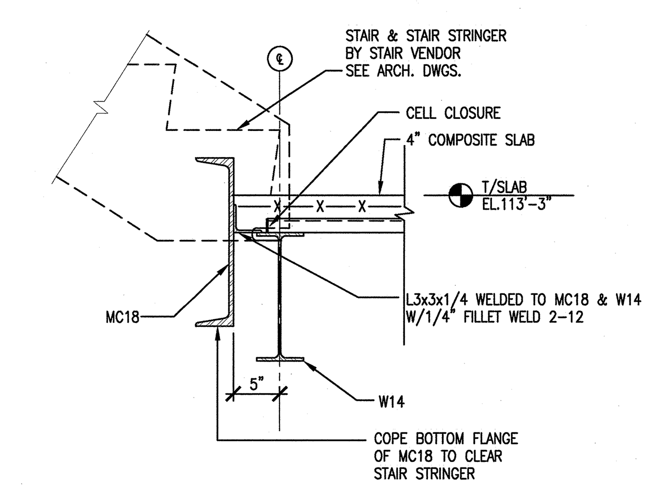

3 SECTION (S2.02.41) SCALE: 1"=1'-0" SDT051001-5A
S2.02.43

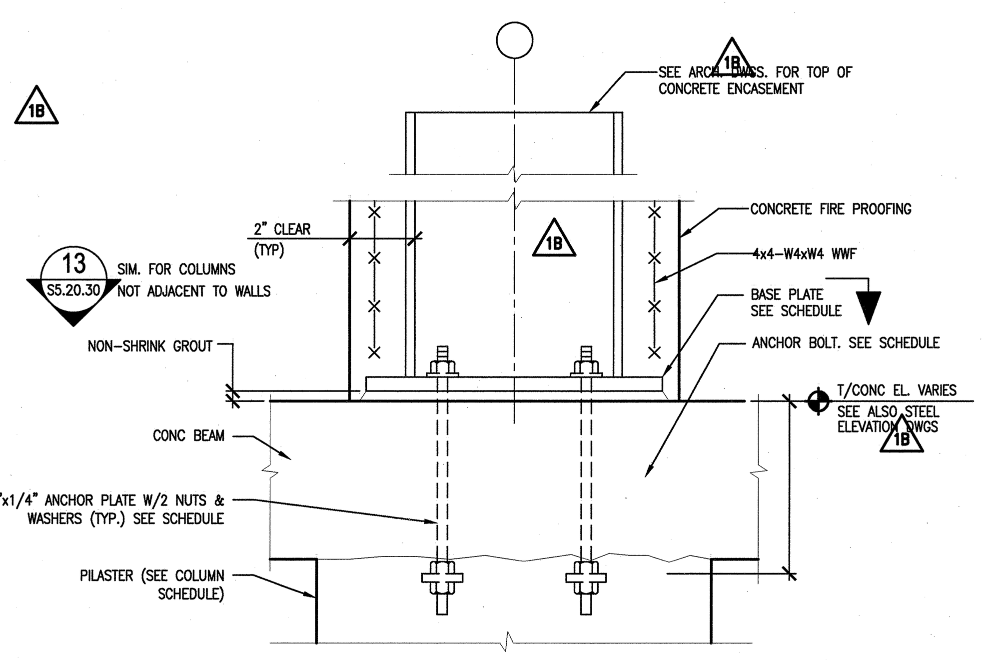

12 SECTION THRU COLUMN-PILASTER (S5.20.30) SCALE: NONE SDT05106-5A
S3.20.31

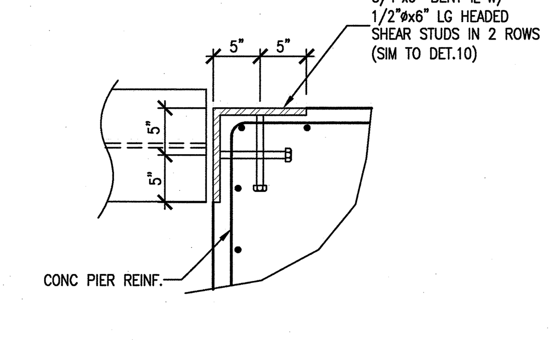

11 EMBEDDED PLATE DETAIL (S2.B1.48) SCALE: NONE SDT051001-5A

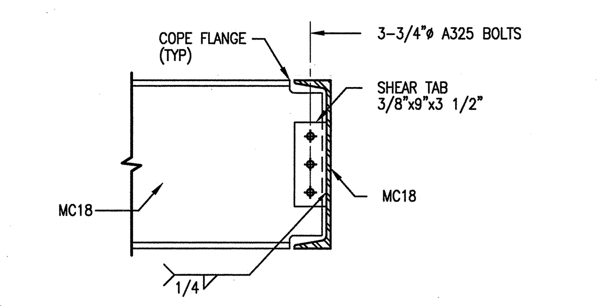

8 SECTION @ MC18 TO MC18 CONNECTION (S2.02.41) SCALE: 1"=1'-0" SDT051016-5A
THRU S2.02.49

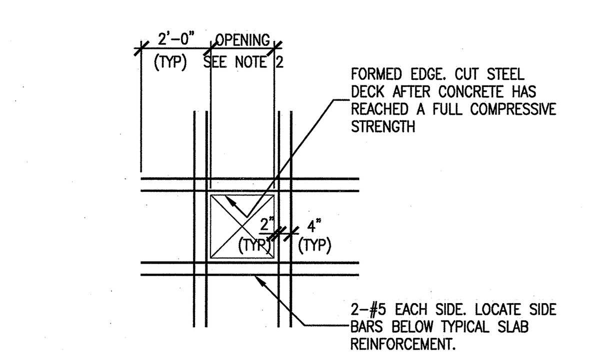

NOTE: 1. OPENING 8" DIAMETER OR LESS REQUIRE NO REINFORCEMENT.
2. COORDINATE SIZE AND LOCATION OF OPENINGS WITH THE CONTRACTOR RESPONSIBLE FOR THE ASSOCIATED WORK.

14 TYPICAL COMPOSITE STEEL DECK SLAB OPENING (S2.02.41) SCALE: NONE SDT051002-5A
S2.02.43
S2.02.44
S2.02.46
S2.02.48

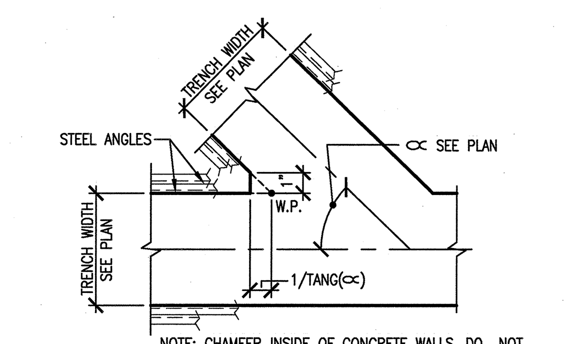

NOTE: CHAMFER INSIDE OF CONCRETE WALLS. DO NOT CHAMFER STEEL ANGLES.

4 DETAIL (S2.01.41) SCALE: 1"=1'-0" SDT051001-5A
S2.01.43
S2.01.44
S2.01.46

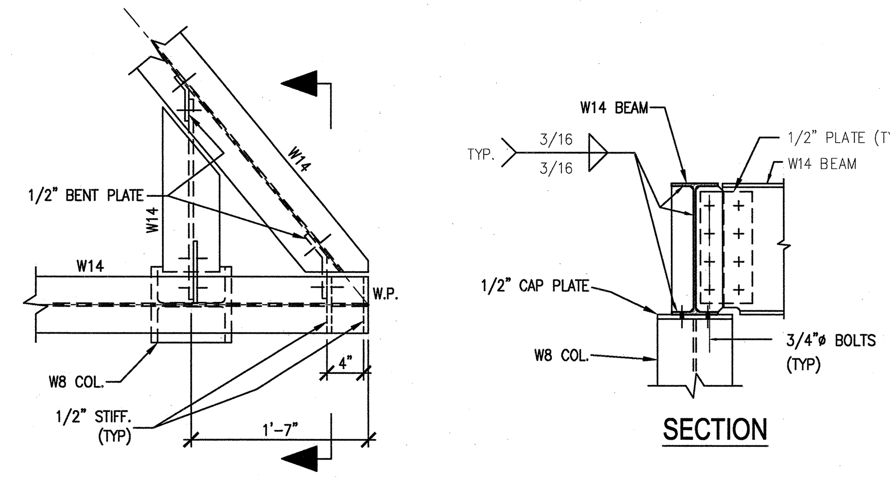

19 PARTIAL PLAN AT SKEWED CONNECTION (S2.09.50) SCALE: 1"=1'-0" SDT051016-5A

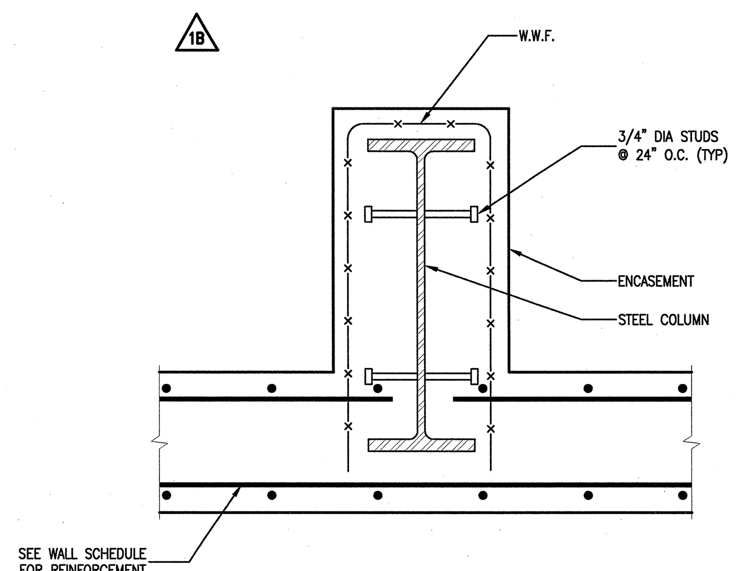

13 PLAN AT COLUMN ENCASEMENT (S5.20.30) SCALE: NONE SDT05106-5A

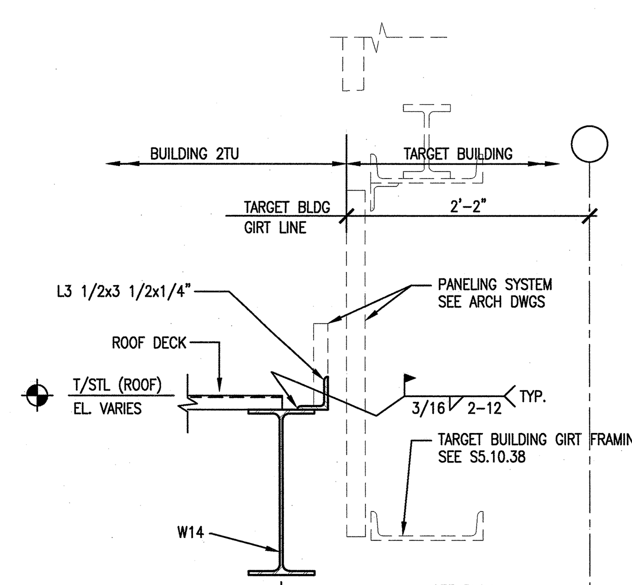

18 SECTION (S2.09.50) SCALE: 1"=1'-0" SDT051016-5A

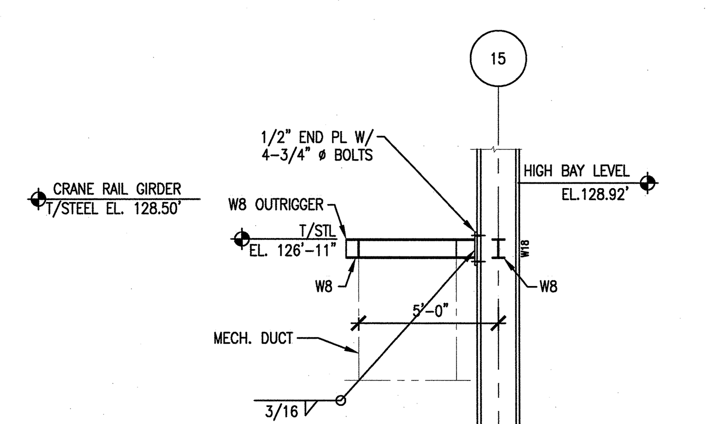

17 DUCT SUPPORT SECTION (S1.05.30) SCALE: 1/2"=1'-0" SDT051003-5A

SCALE 1" = 1'-0"
SCALE: 1/4" = 1'-0"

NO REPRESENTATION OR WARRANTY, EXPRESSED OR IMPLIED, IS MADE AS TO THE ACCURACY, COMPLETENESS OR USEFULNESS OF THE INFORMATION OR STATEMENTS CONTAINED IN THESE DRAWINGS, OR THAT THE USE OR DISCLOSURE OF ANY INFORMATION, APPARATUS, METHOD, OR PROCESS DISCLOSED IN THESE DRAWINGS MAY NOT INFRINGE PRIVATE RIGHTS OF OTHERS. NO LIABILITY IS ASSUMED WITH RESPECT TO THE USE OF, OR FOR DAMAGES RESULTING FROM THE USE OF ANY INFORMATION, APPARATUS, METHOD, OR PROCESS DISCLOSED IN THESE DRAWINGS. DRAWINGS MADE AVAILABLE FOR INFORMATION TO BIDDER ARE NOT TO BE USED FOR OTHER PURPOSES AND ARE TO BE RETURNED UPON REQUEST OF THE FORWARDING CONTRACTOR.

SECTION AND DETAIL KEY: NUMBER OF SECTION OR DETAIL / DRAWING ON WHICH SECTION OR DETAIL IS SHOWN OR TAKEN

THIS DOCUMENT CONTROLLED BY
CHANGE CONTROL SYSTEM 3
ENGINEERING PROCEDURE SNS-ENG-G001

REV	CHANGE TYPE	CHANGE CONTROL SYSTEM	CHANGE REQUEST NUMBER	DESCRIPTION	DSN	CHK	DEPT	DATE	PE	DATE	PJ	DATE	REQ	DATE	UTB	DATE	RPE	RPE NO	DATE	ST	CV	EC	EE	EM	IE	M	PD	SE	AR
1				CERTIFIED FOR CONSTRUCTION – 10/26/01	GPR	REW			[signature]	11/15/01	RAD	11/13/01			[signature]	11/13/01	JJB	23236	10/26/01	REW		WRS	AK	WRS	BWJ		MP		ED
0				SUBSTRUCTURES CERTIFIED FOR CONSTRUCTION – 4/18/01	GPR	REW			CLG	4/18	RAD	4/18			JRL	4/19	JJB	23236	4/17/01	SC		WRS	RL	WRS	BWJ		MP		WAS

REVISION OR ISSUE PURPOSE / REVISION APPROVALS / SQUAD CHECK

RPE: [Seal: JOHN BUSCH, REGISTERED ENGINEER, AGRICULTURE, COMMERCE, NO. 23236, STATE OF TENNESSEE]

DSN	G. REDDY	4/17/01
DRW	G.MARSZALEK	4/17/01
CHK	R.WALKINGTON	4/17/01
DEPT		
PE	C. GARREN	4/18/01
PJ	R. DEAN	4/18/01
REQ		
UTB	J. LAWSON	4/19/01

REV. 1 DATE 10/26/01
DRAWING APPROVALS

108030700-S8E-8700-A087

Knight/Jacobs Joint Venture
701 Scarboro Road, MS 8253
Oak Ridge, TN 37830
865-241-9433
fax 865-241-3400

KNIGHT
Knight Advanced Technology
549 West Randolph Street
Chicago, IL 60661

UT-BATTELLE
Oak Ridge National Laboratory
managed for the DEPARTMENT OF ENERGY under U.S. GOVERNMENT contract DE-AC05-00OR22725
UT-BATTELLE, LLC, © Oak Ridge, Tennessee

PROJECT NAME:
SPALLATION NEUTRON SOURCE

TARGET BUILDING SECTIONS AND DETAILS

1	48	49	50	PLANT	BLDG	FL	SH.	OF	TYPE	CLASS
3	S	X	X	8	8700		1	1	S	U
51 NC	52 NA		53		WBS 1.8.3.7		S5.20.30			REV 1

AutoCAD
Date: 10/24/2001 Time: 13:03:41
Username: DEADYTE
CHI-F_VOL2:PROJECTS\7000\700_CADD\TASK_5A\740_PLOT\S5-20-30.DWG