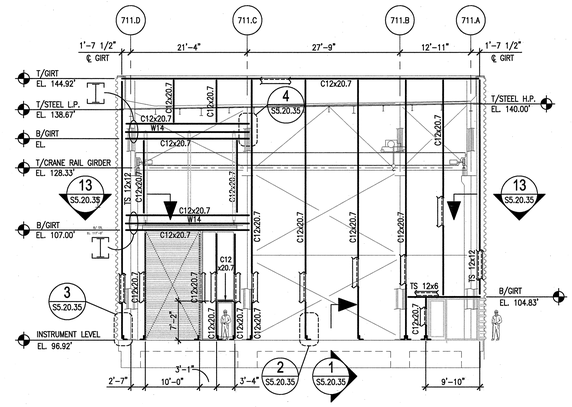

FOR BRACING FRAME INFO SEE 1/S5.20.32

4 S2.01.56 / S2.09.56 ELEVATION @ COL. LINE 711.6 SCALE: 3/32"=1'-0" SEL003-5A

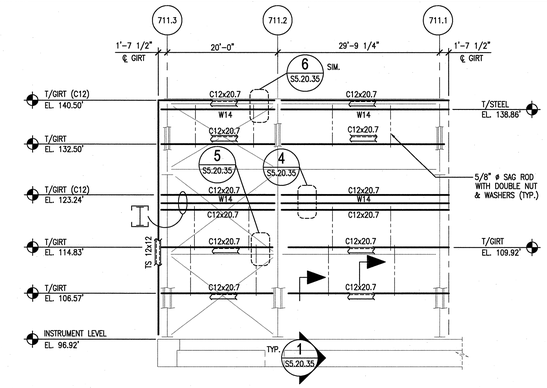

FOR BRACING FRAME INFO SEE 1/S5.20.32

1 S2.01.56 / S2.09.56 ELEVATION @ COL. LINE 711.B SCALE: 3/32"=1'-0" SEL003-5A

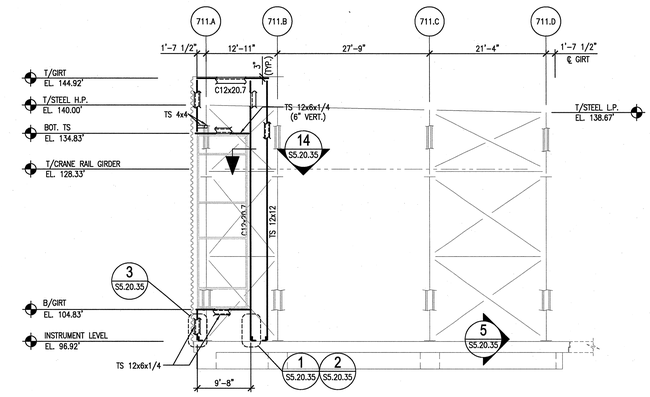

FOR BRACING FRAME INFO SEE 1/S5.20.32

2 S2.01.56 / S2.09.56 ELEVATION @ COL. LINE 711.3 SCALE: 3/32"=1'-0" SEL003-5A

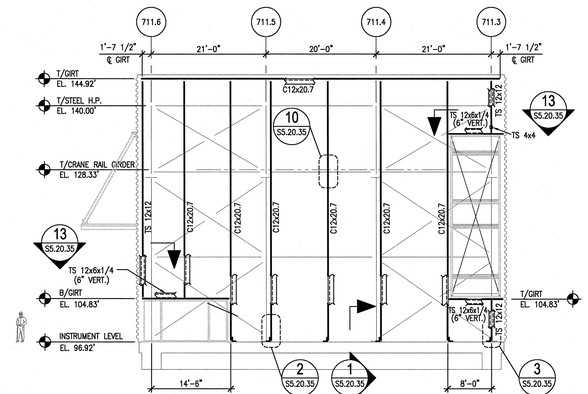

FOR BRACING FRAME INFO SEE 1/S5.20.32

5 S2.01.56 / S2.09.56 ELEVATION @ COL. LINE 711.A SCALE: 3/32"=1'-0" SEL003-5A

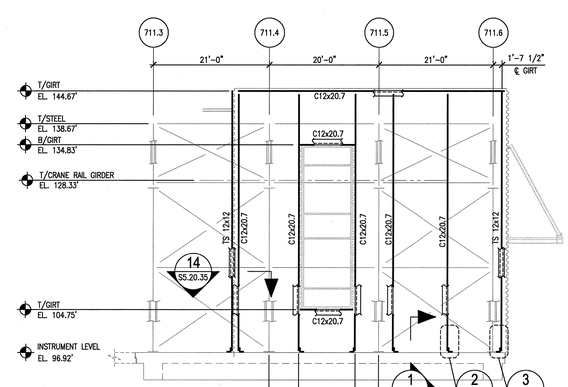

FOR BRACING FRAME INFO SEE 1/S5.20.32

3 S2.01.56 / S2.09.56 ELEVATION @ COL. LINE 711.D SCALE: 3/32"=1'-0" SEL003-5A

10' 0 10' 20'
SCALE: 3/32" = 1'-0"

108030700-S8E-8711-A005

Knight/Jacobs Joint Venture
701 Scarboro Road, MS 8253
Oak Ridge, TN 37830
865-241-9433
fax 865-241-3400

KNIGHT
Knight Advanced Technology
548 West Randolph Street
Chicago, IL 60661

UT-BATTELLE
Oak Ridge National Laboratory
managed for the DEPARTMENT OF ENERGY under
U.S. GOVERNMENT contract DE-AC05-00OR22725
UT-BATTELLE, LLC, ◇ Oak Ridge, Tennessee

PROJECT NAME:
SPALLATION NEUTRON SOURCE

BUILDING 11TU
STEEL GIRT ELEVATIONS
SECTOR 56

1	48	49	50	PLANT	BLDG	FL	SH.	OF	TYPE	CLASS
3	S	X	X	8	8711		1	1	S	U

51	52	53		
NC	NA		WBS 1.8.3.7	S5.11.30	REV 0

DSN	G. REDDY	10/26/01	
DRW	T. DEADY	10/26/01	
CHK	R.WALKINGTON	10/26/01	
DEPT			
PE		11/15/01	
PJ		11/16/01	
REQ			
REV. 0 DATE 10/26/01	UTB	11/13/01	

RPE — JOHN BUSCH — REGISTERED ENGINEER — AGRICULTURE — COMMERCE — NO. 23236 — STATE OF TENNESSEE

DRAWING APPROVALS

REV	CHANGE TYPE	CHANGE CONTROL SYSTEM	CHANGE REQUEST NUMBER	DESCRIPTION	DSN	CHK	DEPT	DATE	PE	DATE	PJ	DATE	REQ	DATE	UTB	DATE	RPE	RPE NO	DATE	ST	CV	EC	EE	EM	IE	M	PD	SE	AR
0				CERTIFIED FOR CONSTRUCTION – 10/26/01	GPR	REW			BRJ	11/15/01	RPD	11/16/01			JJB	11/13/01	JJB	23236	10/26/01	REW	–	WRS	AK	WRS	BWJ	–	MP	–	ED

REVISION OR ISSUE PURPOSE — REVISION APPROVALS — SQUAD CHECK

NO REPRESENTATION OR WARRANTY, EXPRESSED OR IMPLIED, IS MADE AS TO THE ACCURACY, COMPLETENESS OR USEFULNESS OF THE INFORMATION OR STATEMENTS CONTAINED IN THESE DRAWINGS, OR THAT THE USE OR DISCLOSURE OF ANY INFORMATION, APPARATUS, METHOD, OR PROCESS DISCLOSED IN THESE DRAWINGS MAY NOT INFRINGE PRIVATE RIGHTS OF OTHERS. NO LIABILITY IS ASSUMED WITH RESPECT TO THE USE OF, OR FOR DAMAGES RESULTING FROM THE USE OF ANY INFORMATION, APPARATUS, METHOD, OR PROCESS DISCLOSED IN THESE DRAWINGS. DRAWINGS MADE AVAILABLE FOR INFORMATION TO BIDDER ARE NOT TO BE USED FOR OTHER PURPOSES AND ARE TO BE RETURNED UPON REQUEST OF THE FORWARDING CONTRACTOR.

NUMBER OF SECTION OR DETAIL
DRAWING ON WHICH SECTION OR DETAIL IS SHOWN OR TAKEN
SECTION AND DETAIL KEY

THIS DOCUMENT CONTROLLED BY
CHANGE CONTROL SYSTEM 3
ENGINEERING PROCEDURE SNS-ENG-G001

Date: 10/24/2001 Time: 13:05:00
Username: GGR0
Drawing: J:\PROJECTS\S10\SNS\TBL_CAD\STD\SNS_SAT\NS_PLOT\S5-11-30.DWG

AutoCAD