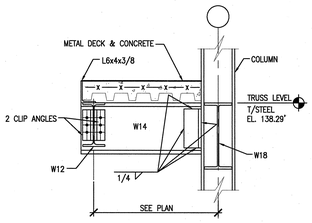

11 SECTION
S2.04.43 SCALE: 3/4"=1'-0" SDT051015-5A

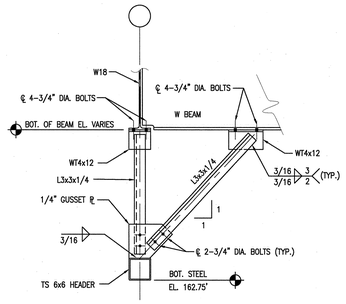

7 SECTION
S5.10.37 SCALE: 3/4"=1'-0" SDT051015-5A

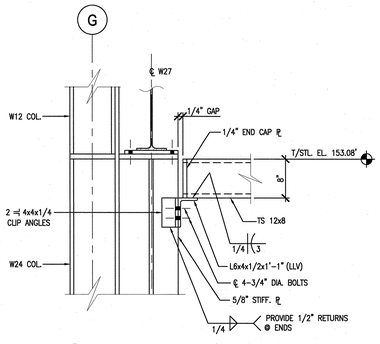

12 TYPICAL DETAIL
– SCALE : 1"=1'-0" SDT051034-5A

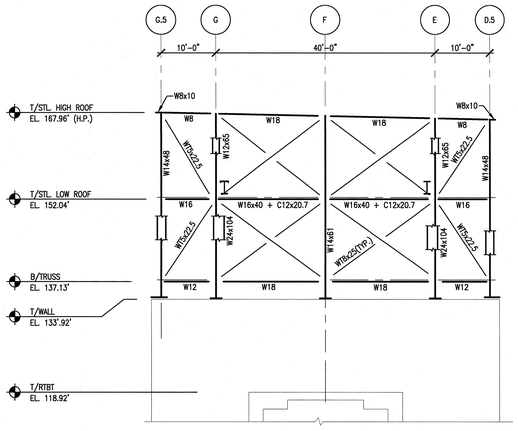

8 ELEVATION AT COL. LINE 0.6 (LOOKING EAST)
S2.04.42 SCALE: 3/32"=1'-0" SEL004-5A

S2.09.41
S2.09.42
S2.09.43

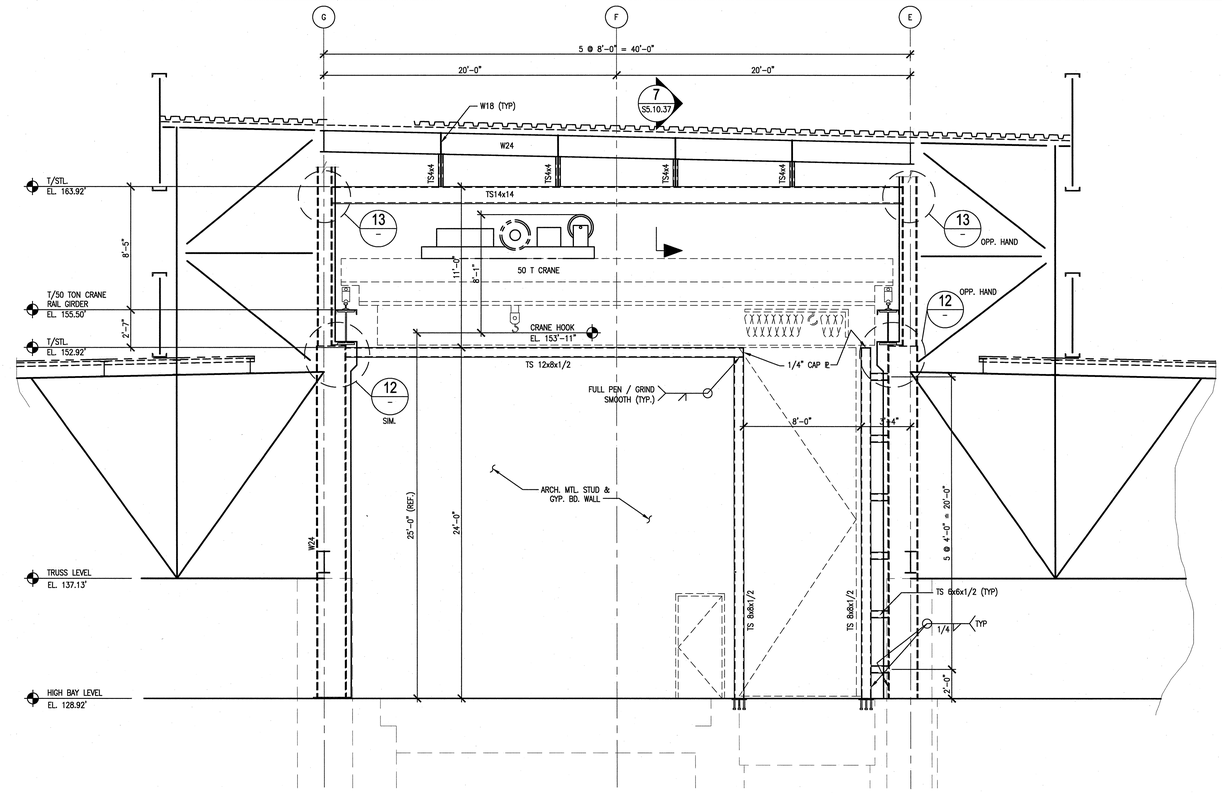

1 INTERIOR FRAMING ELEVATION
S2.09.45 @ COLUMN LINE 11 (12 SIM)
SCALE: 1/4"=1'-0" SDT051010-5A

S2.09.48

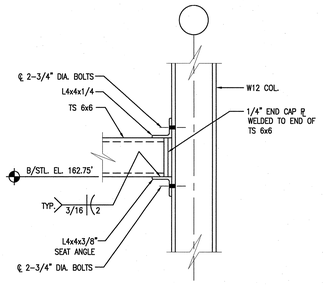

13 TYPICAL DETAIL
– SCALE : 1"=1'-0" SDT051034-5A

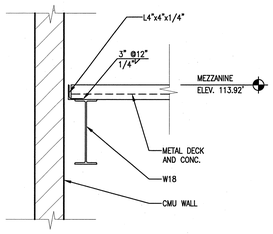

9 SECTION THRU MEZZANINE WALKWAY
S2.02.45 SCALE : 3/4"=1'-0" SDT051008-5A

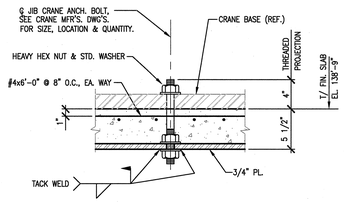

5 TYPICAL SECTION
S5.10.37 SCALE: 1 1/2"=1'-0" SDT051005-5A

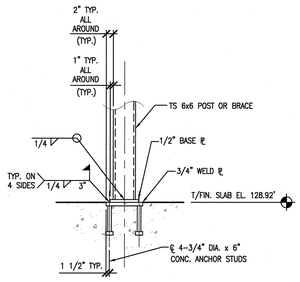

4 DETAIL
S5.10.37 SCALE: 3/4"=1'-0" SDT051015-5A

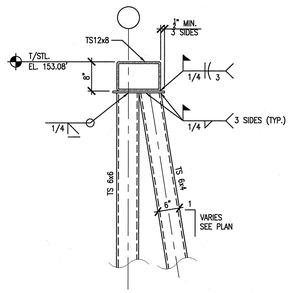

3 DETAIL
S2.04.45 SCALE: 3/4"=1'-0" SDT051015-5A

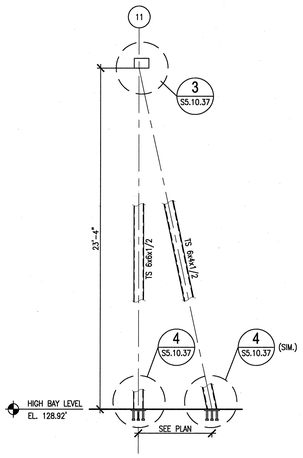

2 ELEVATION
S2.03.45 SCALE: 1/4"=1'-0" SDT051010-5A
S2.04.45

NOTE:
LEAVE POCKET IN WALL MIN. 2" LARGER THAN BASE PLATE. FILL WITH CONCRETE AFTER BEAM IS SET TO WITHIN 2" OF TOP. DRYPACK LAST 2".

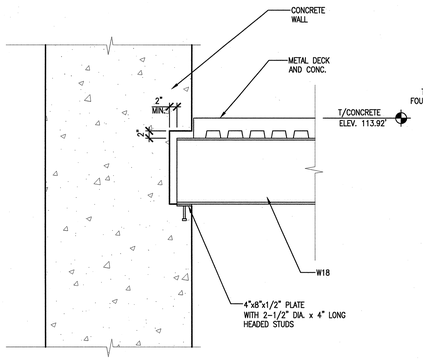

10 SECTION THRU MEZZANINE WALKWAY
S2.02.45 SCALE : 3/4"=1'-0" SDT051008-5A

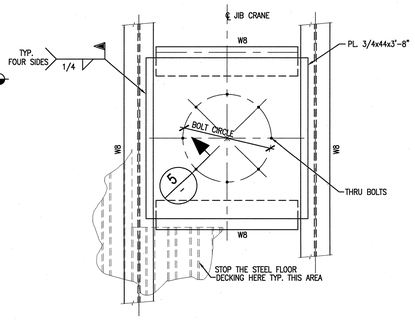

6 JIB CRANE ANCHOR DETAIL - PLAN
S2.04.43 SCALE: 3/4"=1'-0" SDT051015-5A

1' 6" 0 1' 2'
SCALE: 3/4" = 1'-0"
4' 2' 0 4' 8'
SCALE: 1/4" = 1'-0"

108030700-S8E-8700-A098

Knight Jacobs
Knight/Jacobs Joint Venture
701 Scarboro Road, MS 8253
Oak Ridge, TN 37830
865-241-9433
fax 865-241-3400

KNIGHT
Knight Advanced Technology
540 West Madison Street
Chicago, IL 60661

UT-BATTELLE
Oak Ridge National Laboratory
managed for the DEPARTMENT OF ENERGY under
U.S. GOVERNMENT contract DE-AC05-00OR22725
UT-BATTELLE, LLC. ® Oak Ridge, Tennessee

PROJECT NAME:
SPALLATION NEUTRON SOURCE

TARGET BUILDING
SECTIONS AND DETAILS

DSN	G. REDDY	10/26/01
DRW	T. DEADY	10/26/01
CHK	R.WALKINGTON	10/26/01
DEPT		
PE	R.J. Darden	11/13/01
PJ	R.A. Dean	11/13/01
REQ		
UTB	R.J. Darden	11/13/01

RPE
JOHN BUSCH
REGISTERED ENGINEER
AGRICULTURE
No. 23236
STATE OF TENNESSEE
REV. 0 DATE 10/26/01

1	48	49	50	PLANT	BLDG	FL	SH.	OF	TYPE	CLASS
3	S	X	X	8	8700		1	1	S	U
51		52		53	WBS		S5.10.37			REV
NC		NA			1.8.3.7					0

REV	CHANGE TYPE	CHANGE CONTROL SYSTEM	CHANGE CONTROL NUMBER	DESCRIPTION	GPR	REW	DSN	CHK	DEPT	DATE	PE	DATE	PJ	DATE	REQ	DATE	UTB	DATE	RPE	RPE NO	DATE	ST	CV	EC	EE	EM	IE	M	PD	SE	AR
0				CERTIFIED FOR CONSTRUCTION – 10/26/01							RJD	11/13/01	RAD	11/13/01				11/13/01	JJB	23236	10/26/01	REW	–	WRS	AK	WRS	BWJ	–	MP	–	ED

REVISION OR ISSUE PURPOSE — REVISION APPROVALS — SQUAD CHECK

NO REPRESENTATION OR WARRANTY, EXPRESSED OR IMPLIED, IS MADE AS TO THE ACCURACY, COMPLETENESS OR USEFULNESS OF THE INFORMATION OR STATEMENTS CONTAINED IN THESE DRAWINGS, OR THAT THE USE OR DISCLOSURE OF ANY INFORMATION, APPARATUS, METHOD, OR PROCESS DISCLOSED IN THESE DRAWINGS MAY NOT INFRINGE PRIVATE RIGHTS OF OTHERS. NO LIABILITY IS ASSUMED WITH RESPECT TO THE USE OF, OR FOR DAMAGES RESULTING FROM THE USE OF ANY INFORMATION, APPARATUS, METHOD, OR PROCESS DISCLOSED IN THESE DRAWINGS. DRAWINGS MADE AVAILABLE FOR INFORMATION TO BIDDER ARE NOT TO BE USED FOR OTHER PURPOSES AND ARE TO BE RETURNED UPON REQUEST OF THE FORWARDING CONTRACTOR.

NUMBER OF SECTION OR DETAIL
DRAWING ON WHICH SECTION OR DETAIL IS SHOWN OR TAKEN
SECTION AND DETAIL KEY

THIS DOCUMENT CONTROLLED BY
CHANGE CONTROL SYSTEM 3
ENGINEERING PROCEDURE SNS-ENG-0001

Date: 10/24/2001 Time: 13:06:09
Username: DEADYTC
DH:C:\PROJPROJECT\7000\700\D0STD\S04_S8\700_PLOT\D5-10-37.DWG

AutoCAD